US008732868B2

(12) **United States Patent**
Ellis

(10) **Patent No.: US 8,732,868 B2**
(45) **Date of Patent: *May 27, 2014**

(54) **HELMET AND/OR A HELMET LINER WITH AT LEAST ONE INTERNAL FLEXIBILITY SIPE WITH AN ATTACHMENT TO CONTROL AND ABSORB THE IMPACT OF TORSIONAL OR SHEAR FORCES**

(71) Applicant: **Frampton E. Ellis**, Jasper, FL (US)

(72) Inventor: **Frampton E. Ellis**, Jasper, FL (US)

(*) Notice: Subject to any disclaimer, the term of this patent is extended or adjusted under 35 U.S.C. 154(b) by 0 days.

This patent is subject to a terminal disclaimer.

(21) Appl. No.: **13/765,413**

(22) Filed: **Feb. 12, 2013**

(65) **Prior Publication Data**

US 2013/0152282 A1 Jun. 20, 2013

Related U.S. Application Data

(63) Continuation of application No. 13/472,676, filed on May 16, 2012, now Pat. No. 8,494,324, which is a

(Continued)

(51) **Int. Cl.**
A42B 3/00 (2006.01)
A42B 3/10 (2006.01)

(52) **U.S. Cl.**
USPC **2/411**; 2/414

(58) **Field of Classification Search**
USPC ..... 2/410–414, 6.8, 415, 425, 16, 20, 21, 2/24, 68, 267, DIG. 3
See application file for complete search history.

(56) **References Cited**

U.S. PATENT DOCUMENTS

193,914 A 8/1877 Berry
280,791 A 7/1883 Brooks

(Continued)

FOREIGN PATENT DOCUMENTS

AT 200963 5/1958
CA 1138194 12/1982

(Continued)

OTHER PUBLICATIONS

European Search Report EP-05825112.5-2318 (Jul. 14, 2010).

(Continued)

Primary Examiner — Alissa L Hoey
(74) *Attorney, Agent, or Firm* — Mendelsohn, Drucker & Dunleavy, P.C.

(57) **ABSTRACT**

A helmet and/or helmet liner having one or more internal flexibility sipes for controlling and absorbing the impact of torsional or shear forces, including, for example, at least a first bladder, chamber, or compartment having an inner surface; a second bladder, chamber, or compartment having at least one cavity or void that at least partially encloses at least one gas, and an outer surface located in the first bladder, chamber, or compartment, as viewed in a cross-section, and at least one internal sipe, which is defined by a portion of the inner surface of the first bladder, chamber, or compartment and a portion of the outer surface of the second bladder, chamber, or compartment. The surface portions defining the internal sipe oppose each other and are configured to be movable relative to each other in a sliding motion and have at least one centrally located attachment between the surface portions.

51 Claims, 69 Drawing Sheets

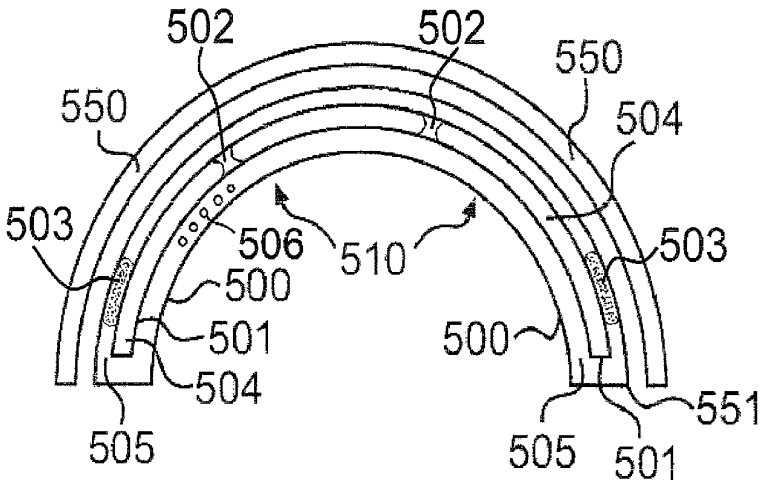

Related U.S. Application Data

(63) continuation of application No. 13/457,990, filed on Apr. 27, 2012, now Pat. No. 8,567,095, which is a continuation of application No. 13/357,332, filed on Jan. 24, 2012, now Pat. No. 8,561,323, which is a continuation of application No. 11/802,930, filed on May 25, 2007, now Pat. No. 8,256,147, which is a continuation-in-part of application No. 11/802,033, filed on May 18, 2007, now Pat. No. 8,291,618, and a continuation-in-part of application No. 11/282,665, filed on Nov. 21, 2005, now Pat. No. 8,141,276.

(60) Provisional application No. 60/808,819, filed on May 26, 2006, provisional application No. 60/802,779, filed on May 24, 2006, provisional application No. 60/802,103, filed on May 22, 2006, provisional application No. 60/801,381, filed on May 19, 2006, provisional application No. 60/700,179, filed on Jul. 18, 2005, provisional application No. 60/679,182, filed on May 9, 2005, provisional application No. 60/677,538, filed on May 4, 2005, provisional application No. 60/672,407, filed on Apr. 18, 2005, provisional application No. 60/634,781, filed on Dec. 9, 2004, provisional application No. 60/634,782, filed on Dec. 9, 2004, provisional application No. 60/633,664, filed on Dec. 6, 2004, provisional application No. 60/629,385, filed on Nov. 22, 2004, provisional application No. 60/629,384, filed on Nov. 22, 2004, provisional application No. 60/629,523, filed on Nov. 22, 2004.

(56) **References Cited**

U.S. PATENT DOCUMENTS

288,127	A		11/1883	Shepard
500,385	A		6/1893	Hall
532,429	A		1/1895	Rogers
584,373	A		6/1897	Kuhn
1,283,335	A		10/1918	Shillcock
1,289,106	A		12/1918	Bullock
D55,115	S		5/1920	Barney
1,458,446	A		6/1923	Schaeffer
1,622,860	A		3/1927	Cutler
1,639,381	A		8/1927	Manelas
1,701,260	A		2/1929	Fischer
1,735,986	A		11/1929	Wray
1,853,034	A		4/1932	Bradley
2,004,906	A		6/1935	Simister
2,120,987	A		6/1938	Murray
2,147,197	A		2/1939	Glidden
2,155,166	A		4/1939	Kraft
2,162,912	A		6/1939	Craver
2,170,652	A		8/1939	Brennan
2,179,942	A		11/1939	Lyne
D119,894	S		4/1940	Sherman
2,201,300	A		5/1940	Prue
2,206,860	A		7/1940	Sperry
D122,131	S		8/1940	Sannar
D128,817	S		8/1941	Esterson
2,251,468	A		8/1941	Smith
2,328,242	A		8/1943	Witherill
2,345,831	A		4/1944	Pierson
2,433,329	A		12/1947	Adler et al.
2,434,770	A		1/1948	Lutey
2,470,200	A		5/1949	Wallach
2,627,676	A		2/1953	Hack
2,718,715	A		9/1955	Spilman
2,762,134	A	*	9/1956	Town 36/153
2,814,133	A		11/1957	Herbst
3,005,272	A		10/1961	Shelare et al.
3,087,261	A		4/1963	Russell
3,100,354	A		8/1963	Lombard et al.
3,110,971	A		11/1963	Chang
3,170,250	A		2/1965	Scholl
3,171,133	A	*	3/1965	Steffen 2/414
3,186,004	A	*	6/1965	Carlini 2/413
3,204,678	A		9/1965	Worcester
3,242,500	A	*	3/1966	Derr 2/412
3,248,738	A	*	5/1966	Morgan 2/462
3,253,355	A		5/1966	Menkin
3,305,947	A		2/1967	Kalsoy
3,308,560	A		3/1967	Jones
3,407,406	A	*	10/1968	Werner et al. 2/413
3,416,174	A		12/1968	Novitske
3,469,576	A		9/1969	Everts et al.
3,512,274	A		5/1970	McGrath
3,535,799	A		10/1970	Onituska
3,600,714	A	*	8/1971	Cade et al. 2/83
3,806,950	A	*	4/1974	Spencer-Foote 2/413
3,806,974	A		4/1974	Di Paolo
3,824,716	A		7/1974	Di Paolo
3,834,046	A		9/1974	Fowler
3,849,801	A	*	11/1974	Holt et al. 2/413
3,863,366	A		2/1975	Auberry et al.
3,872,511	A	*	3/1975	Nichols 2/413
3,958,291	A		5/1976	Spier
3,964,181	A		6/1976	Holcombe, Jr.
3,995,320	A	*	12/1976	Zafuto 2/463
3,997,984	A		12/1976	Hayward
4,003,145	A		1/1977	Liebscher et al.
4,023,213	A	*	5/1977	Rovani 2/413
4,030,213	A		6/1977	Daswick
4,035,846	A	*	7/1977	Jencks 2/413
4,043,058	A		8/1977	Hollister et al.
4,059,910	A		11/1977	Bryden
4,060,855	A	*	12/1977	Rappleyea 2/413
4,064,565	A	*	12/1977	Griffiths 2/412
4,067,063	A	*	1/1978	Ettinger 2/413
4,068,395	A		1/1978	Senter
4,083,125	A		4/1978	Benseler et al.
4,096,649	A		6/1978	Saurwein
4,098,011	A		7/1978	Bowerman et al.
4,128,950	A		12/1978	Bowerman et al.
4,128,951	A		12/1978	Tansill
4,141,158	A		2/1979	Benseler et al.
4,145,785	A		3/1979	Lacey
4,149,324	A		4/1979	Lesser et al.
4,161,828	A		7/1979	Benseler et al.
4,161,829	A		7/1979	Wayser
4,170,078	A		10/1979	Moss
4,172,495	A	*	10/1979	Zebuhr et al. 165/46
4,183,156	A		1/1980	Rudy
4,194,310	A		3/1980	Bowerman
D256,180	S		8/1980	Turner
D256,400	S		8/1980	Famolare, Jr.
4,217,705	A		8/1980	Donzis
4,219,945	A		9/1980	Rudy
4,223,457	A		9/1980	Borgeas
4,227,320	A		10/1980	Borgeas
4,235,026	A		11/1980	Plagenhoef
4,237,627	A		12/1980	Turner
4,240,214	A		12/1980	Sigle et al.
4,241,523	A		12/1980	Daswick
4,245,406	A		1/1981	Landay
4,250,638	A		2/1981	Linnemann
4,258,480	A		3/1981	Famolare, Jr.
4,259,792	A		4/1981	Halberstadt
4,262,433	A		4/1981	Hagg et al.
4,263,728	A		4/1981	Frecentese
4,266,349	A		5/1981	Schmohl
4,268,980	A		5/1981	Gudas
4,271,606	A		6/1981	Rudy
4,272,858	A		6/1981	Hlustik
4,274,211	A		6/1981	Funck
4,297,797	A		11/1981	Meyers
4,302,892	A		12/1981	Adamik
4,305,212	A		12/1981	Coomer
4,308,671	A		1/1982	Bretschneider
4,309,832	A		1/1982	Hunt
4,316,332	A		2/1982	Giese et al.

(56) **References Cited**

U.S. PATENT DOCUMENTS

4,316,335	A		2/1982	Giese et al.
4,319,412	A		3/1982	Muller et al.
D264,017	S		4/1982	Turner
4,322,895	A		4/1982	Hockerson
D265,019	S		6/1982	Vermonet
4,335,529	A		6/1982	Badalamenti
4,340,626	A		7/1982	Rudy
4,342,161	A		8/1982	Schmohl
4,345,338	A	*	8/1982	Frieder et al. 2/414
4,348,821	A		9/1982	Daswick
4,354,284	A	*	10/1982	Gooding 2/413
4,354,319	A		10/1982	Block et al.
4,361,971	A		12/1982	Bowerman
4,366,634	A		1/1983	Giese et al.
4,370,817	A		2/1983	Ratanangsu
4,372,059	A		2/1983	Ambrose
4,375,108	A	*	3/1983	Gooding 2/413
4,398,357	A		8/1983	Batra
4,399,620	A		8/1983	Funck
D272,294	S		1/1984	Watanabe
4,432,099	A	*	2/1984	Grick et al. 2/412
4,449,306	A		5/1984	Cavanagh
4,451,994	A		6/1984	Fowler
4,454,662	A		6/1984	Stubblefield
4,455,765	A		6/1984	Sjöswärd
4,455,767	A		6/1984	Bergmans
4,468,870	A		9/1984	Sternberg
4,484,364	A	*	11/1984	Mitchell et al. 2/413
4,484,397	A		11/1984	Curley, Jr.
4,494,321	A		1/1985	Lawlor
4,505,055	A		3/1985	Bergmans
4,506,462	A		3/1985	Cavanagh
4,521,979	A		6/1985	Blaser
4,527,345	A		7/1985	Lopez
D280,568	S		9/1985	Stubblefield
4,538,301	A	*	9/1985	Sawatzki et al. 2/467
4,542,598	A		9/1985	Misevich et al.
4,546,559	A		10/1985	Dassler
4,547,979	A		10/1985	Harada et al.
4,557,059	A		12/1985	Misevich et al.
4,559,723	A		12/1985	Hamy et al.
4,559,724	A		12/1985	Norton
4,561,195	A		12/1985	Onoda et al.
4,570,362	A		2/1986	Vermonet
4,577,417	A		3/1986	Cole
4,578,882	A		4/1986	Talarico, II
4,580,359	A		4/1986	Kurrash et al.
4,624,061	A		11/1986	Wezel et al.
4,624,062	A		11/1986	Autry et al.
4,638,577	A		1/1987	Riggs
4,641,438	A		2/1987	Laird et al.
4,642,917	A		2/1987	Ungar
4,651,445	A		3/1987	Hannibal
D289,341	S		4/1987	Turner
4,654,983	A		4/1987	Graham
4,658,515	A		4/1987	Oatman
4,667,423	A		5/1987	Autry
4,670,995	A		6/1987	Huang
4,676,010	A		6/1987	Cheskin
4,694,591	A		9/1987	Banich et al.
4,697,361	A		10/1987	Ganter et al.
D293,275	S		12/1987	Bua
4,715,133	A		12/1987	Hartjes et al.
4,724,622	A		2/1988	Mills
D294,425	S		3/1988	Le
4,727,660	A		3/1988	Bernhard
4,730,402	A		3/1988	Norton et al.
4,731,939	A		3/1988	Parracho et al.
4,747,220	A		5/1988	Autry et al.
D296,149	S		6/1988	Diaz
D296,152	S		6/1988	Selbiger
4,748,753	A		6/1988	Ju
4,754,561	A		7/1988	DuFour
4,756,098	A		7/1988	Boggia
4,757,620	A		7/1988	Tiitola
4,759,136	A		7/1988	Stewart et al.
4,768,295	A		9/1988	Ito
4,769,926	A		9/1988	Meyers
4,777,738	A		10/1988	Giese
D298,684	S		11/1988	Pitchford
4,783,910	A		11/1988	Boys
4,784,462	A		11/1988	Priaroggia
4,785,557	A		11/1988	Kelley et al.
4,802,289	A		2/1989	Guldager
4,817,304	A		4/1989	Parker et al.
4,827,631	A		5/1989	Thornton
4,833,795	A		5/1989	Diaz
4,837,949	A		6/1989	Dufour
D302,900	S		8/1989	Kolman et al.
4,853,980	A	*	8/1989	Zarotti 2/413
4,854,057	A		8/1989	Misevich et al.
4,858,340	A		8/1989	Pasternak
4,864,737	A		9/1989	Marrello
4,864,738	A	*	9/1989	Horovitz 36/29
4,866,861	A		9/1989	Noone
4,876,807	A		10/1989	Tiitola et al.
4,890,398	A		1/1990	Thomasson
4,894,932	A		1/1990	Harada
4,894,933	A		1/1990	Tonkel et al.
4,897,936	A		2/1990	Fuerst
4,906,502	A		3/1990	Rudy
4,922,631	A		5/1990	Anderie
4,934,070	A		6/1990	Mauger
4,934,073	A		6/1990	Robinson
D310,131	S		8/1990	Hase
D310,132	S		8/1990	Hase
4,947,560	A		8/1990	Fuerst et al.
4,949,476	A		8/1990	Anderie
D310,906	S		10/1990	Hase
4,972,527	A	*	11/1990	Wallace 2/414
4,979,794	A		12/1990	Evans
4,982,737	A		1/1991	Guttmann
4,989,349	A		2/1991	Ellis, III
D315,634	S		3/1991	Yung-Mao
5,010,662	A		4/1991	Dabuzhsky et al.
5,012,597	A		5/1991	Thomasson
5,014,365	A	*	5/1991	Schulz 2/412
5,014,449	A		5/1991	Richard et al.
5,024,007	A		6/1991	DuFour
5,025,573	A		6/1991	Giese et al.
5,027,864	A		7/1991	Conti et al.
5,048,203	A		9/1991	Kling
D320,302	S		10/1991	Kiyosawa
2,052,130	A		10/1991	Barry et al.
5,052,130	A		10/1991	Barry
5,077,916	A		1/1992	Beneteau
5,079,856	A		1/1992	Treulsen
5,083,320	A	*	1/1992	Halstead 2/413
5,092,060	A		3/1992	Frachey et al.
5,095,545	A	*	3/1992	Lane 2/68
D327,164	S		6/1992	Hatfield
D327,165	S		6/1992	Hatfield
5,131,173	A		7/1992	Anderie
D328,968	S		9/1992	Tinker
D329,528	S		9/1992	Hatfield
D329,739	S		9/1992	Hatfield
5,153,945	A	*	10/1992	Kobayashi et al. 2/413
D330,972	S		11/1992	Hatfield et al.
5,168,576	A		12/1992	Krent et al.
D332,344	S		1/1993	Hatfield et al.
D332,692	S		1/1993	Hatfield et al.
5,175,889	A	*	1/1993	Infusino 2/413
5,191,727	A		3/1993	Barry et al.
5,204,998	A	*	4/1993	Liu 2/411
5,224,280	A		7/1993	Preman et al.
5,224,810	A		7/1993	Pitkin
5,237,758	A		8/1993	Zachman
5,247,742	A		9/1993	Kilgore et al.
5,259,070	A	*	11/1993	De Roza 2/413
5,259,071	A	*	11/1993	Scott et al. 2/413
5,263,203	A	*	11/1993	Kraemer et al. 2/413
D345,249	S		3/1994	Sell, Jr.
D347,105	S		5/1994	Johnson
5,317,819	A		6/1994	Ellis, III

(56) **References Cited**

U.S. PATENT DOCUMENTS

5,343,639	A		9/1994	Kilgore
5,353,459	A		10/1994	Potter
5,353,523	A		10/1994	Kilgore
5,361,410	A	*	11/1994	Sigl 2/465
5,369,896	A		12/1994	Frachey et al.
D372,114	S		7/1996	Turner et al.
5,539,934	A	*	7/1996	Ponder 2/413
5,543,194	A		8/1996	Rudy
5,544,429	A		8/1996	Ellis, III
5,555,584	A		9/1996	Moore, III et al.
5,572,805	A		11/1996	Giese et al.
5,675,844	A	*	10/1997	Guyton et al. 2/455
5,678,327	A		10/1997	Halberstadt
5,687,426	A		11/1997	Sperber
D388,594	S		1/1998	Turner et al.
5,751,881	A		5/1998	Konda et al.
5,813,141	A		9/1998	Cho
5,813,142	A		9/1998	Demon
5,823,852	A	*	10/1998	Chu 450/38
5,846,063	A	*	12/1998	Lakic 417/440
D409,362	S		5/1999	Turner et al.
D409,826	S		5/1999	Turner et al.
D410,138	S		5/1999	Turner et al.
5,909,948	A		6/1999	Ellis, III
5,913,412	A	*	6/1999	Huber et al. 2/414
5,930,918	A		8/1999	Healy et al.
5,956,777	A	*	9/1999	Popovich 2/424
5,976,451	A		11/1999	Skaja et al.
5,979,078	A		11/1999	McLaughlin
5,984,762	A		11/1999	Tedeschi et al.
5,987,781	A		11/1999	Pavesi et al.
6,023,857	A		2/2000	Vizy et al.
6,032,300	A		3/2000	Bainbridge et al.
6,055,676	A		5/2000	Bainbridge et al.
6,073,271	A	*	6/2000	Alexander et al. 2/413
6,098,209	A	*	8/2000	Bainbridge et al. 2/456
6,115,941	A		9/2000	Ellis, III
6,115,945	A		9/2000	Ellis, III
6,131,196	A		10/2000	Vallion
6,163,982	A		12/2000	Ellis, III
6,178,560	B1	*	1/2001	Halstead et al. 2/413
6,226,801	B1	*	5/2001	Alexander et al. 2/413
D444,293	S		7/2001	Turner et al.
6,253,466	B1		7/2001	Harmon-Weiss et al.
6,282,724	B1		9/2001	Abraham et al.
6,301,722	B1		10/2001	Nickerson et al.
6,308,439	B1		10/2001	Ellis
6,308,813	B1		10/2001	Carlson
D450,916	S		11/2001	Turner et al.
6,314,662	B1		11/2001	Ellis
6,351,853	B1	*	3/2002	Halstead et al. 2/413
6,357,054	B1		3/2002	Bainbridge et al.
6,360,453	B1		3/2002	Ellis
6,391,405	B1		5/2002	Bonk et al.
6,425,135	B1		7/2002	Aldrich
6,446,271	B1	*	9/2002	Ho 2/414
6,453,477	B1		9/2002	Bainbridge et al.
6,457,261	B1		10/2002	Crary
6,487,795	B1		12/2002	Ellis
6,493,881	B1	*	12/2002	Picotte 2/413
6,519,780	B2	*	2/2003	Goodwin 2/267
6,530,092	B2	*	3/2003	Pope 2/413
6,537,639	B1		3/2003	Huang
6,571,490	B2		6/2003	Tawney et al.
6,584,706	B1		7/2003	Ellis
6,591,428	B2	*	7/2003	Halstead et al. 2/413
6,591,429	B1	*	7/2003	Jaszai 2/455
6,591,519	B1		7/2003	Ellis
6,629,376	B1		10/2003	Ellis
6,658,671	B1	*	12/2003	Von Holst et al. 2/412
6,662,470	B2		12/2003	Ellis
6,668,470	B2		12/2003	Ellis
6,675,498	B1		1/2004	Ellis
6,675,499	B2		1/2004	Ellis
6,681,408	B2	*	1/2004	Ku 2/413
6,691,327	B1		2/2004	Meyer
6,708,424	B1		3/2004	Ellis
6,722,058	B2		4/2004	Lucas et al.
6,729,046	B2		5/2004	Ellis
6,789,331	B1		9/2004	Ellis
6,795,625	B1		9/2004	Ishii et al.
6,810,534	B2		11/2004	Durkin et al.
6,810,606	B1		11/2004	Ellis, III
D500,585	S		1/2005	Wahoske et al.
6,837,951	B2		1/2005	Rapaport
6,845,573	B2		1/2005	Litchfield et al.
6,846,534	B2		1/2005	Bonk et al.
6,848,200	B1		2/2005	Westin
6,851,204	B2		2/2005	Aveni et al.
6,859,948	B2		3/2005	Melts
6,918,197	B2		7/2005	Ellis
6,946,050	B2		9/2005	Dojan et al.
6,957,000	B2		10/2005	McAlpine et al.
6,971,193	B1		12/2005	Potter et al.
6,976,321	B1		12/2005	Lakic
6,990,755	B2		1/2006	Hatfield et al.
7,028,344	B2		4/2006	Toth
7,037,571	B2		5/2006	Fish et al.
7,076,890	B2		7/2006	Grove et al.
7,086,179	B2		8/2006	Dojan et al.
7,093,379	B2		8/2006	Ellis
7,123,801	B2		10/2006	Fitz
7,127,834	B2		10/2006	Ellis
7,132,032	B2		11/2006	Tawney et al.
7,140,129	B2		11/2006	Newson et al.
7,168,185	B2		1/2007	Ellis
7,168,188	B2		1/2007	Auger et al.
7,174,658	B2		2/2007	Ellis
7,194,826	B2		3/2007	Ungari
7,334,349	B2		2/2008	Sokolowski et al.
7,484,318	B2		2/2009	Finkelstein
7,591,084	B2		9/2009	Santa Ana
7,926,124	B2		4/2011	Hunter et al.
8,141,276	B2		3/2012	Ellis
8,164,170	B2		4/2012	Ellis
8,205,356	B2		6/2012	Ellis
8,256,147	B2		9/2012	Ellis
8,291,618	B2		10/2012	Ellis
2001/0032351	A1	*	10/2001	Nakayama et al. 2/412
2002/0002730	A1	*	1/2002	Dennis et al. 2/411
2002/0023291	A1	*	2/2002	Mendoza 2/412
2002/0152541	A1	*	10/2002	Halstead et al. 2/413
2002/0152542	A1	*	10/2002	Dennis et al. 2/414
2002/0166157	A1	*	11/2002	Pope 2/413
2003/0046830	A1		3/2003	Ellis, III
2003/0079276	A1	*	5/2003	Forsyth et al. 2/267
2003/0096899	A1		5/2003	Pearce
2003/0200598	A1	*	10/2003	Jessie 2/413
2004/0226077	A1	*	11/2004	Toth 2/411
2005/0039346	A1		2/2005	Thomas et al.
2005/0076536	A1		4/2005	Hatfield et al.
2005/0097658	A1		5/2005	Lyons et al.
2005/0144808	A1		7/2005	Vito et al.
2005/0246824	A1	*	11/2005	Berger et al. 2/412
2005/0262739	A1		12/2005	McDonald et al.
2006/0010717	A1		1/2006	Finkelstein
2006/0137221	A1		6/2006	Dojan et al.
2006/0179683	A1		8/2006	Weiss et al.
2006/0230636	A1		10/2006	Kokstis et al.
2006/0248749	A1		11/2006	Ellis
2007/0084081	A1		4/2007	Fallon
2007/0094896	A1		5/2007	Hatfield et al.
2008/0083140	A1		4/2008	Ellis
2008/0229614	A1		9/2008	Santa Ana
2009/0200661	A1		8/2009	Ellis
2012/0174434	A1		7/2012	Ellis
2012/0210603	A1		8/2012	Ellis
2012/0224819	A1		9/2012	Ellis
2012/0226353	A1		9/2012	Ellis

FOREIGN PATENT DOCUMENTS

CA	1176458	10/1984
DE	23257	5/1956

(56) **References Cited**

FOREIGN PATENT DOCUMENTS

DE	1888119		12/1963
DE	1918131		6/1965
DE	1918132		6/1965
DE	1287477		1/1969
DE	1290844		3/1969
DE	2036062		7/1970
DE	1948620		5/1971
DE	1685293		7/1971
DE	1685260		10/1971
DE	2045430		3/1972
DE	2522127		11/1976
DE	2525613		12/1976
DE	2602310		7/1977
DE	2613312		10/1977
DE	2706645		8/1978
DE	2654116		1/1979
DE	2737765		3/1979
DE	2805426		8/1979
DE	3021936		4/1981
DE	3024587	A1	1/1982
DE	8219616.8		9/1982
DE	3113295		10/1982
DE	3245182		5/1983
DE	3317462		10/1983
DE	8431831.7		12/1984
DE	3347343		7/1985
DE	8530136.1		2/1988
DE	3629245		3/1988
EP	0048965		4/1982
EP	0083449	A1	12/1982
EP	0130816		1/1985
EP	0185781		7/1986
EP	0207063		10/1986
EP	0206511		12/1986
EP	0213257		3/1987
EP	0215974		4/1987
EP	0238995		9/1987
EP	0260777		3/1988
EP	0329391		8/1989
EP	0410087		1/1991
EP	0697825		2/1996
EP	790787	B1 *	8/1997
EP	0301331		2/1998
EP	0910964		4/1999
EP	1068460		1/2001
EP	1374808		1/2004
EP	1414322		5/2004
EP	1480534		12/2004
EP	1529457		5/2005
FR	602501		3/1926
FR	925961		9/1947
FR	1004472		3/1952
FR	1245672		10/1960
FR	1323455		2/1963
FR	2006270		11/1972
FR	2261721		9/1975
FR	2511850		3/1983
FR	2622411		5/1989
GB	9591		0/1913
GB	16143		0/1892
GB	764956		1/1957
GB	792034		3/1958
GB	807305		1/1959
GB	1504615		3/1978
GB	2 023 405		1/1980
GB	2 039 717		8/1980
GB	2076633		12/1981
GB	2133668		8/1984
GB	2 136 670		9/1984
JP	39-15597		8/1964
JP	45-5154		3/1970
JP	50-71132		11/1975
JP	57-139333		8/1982
JP	59-23525		7/1984
JP	61-55810		4/1986
JP	1129505		6/1986
JP	61-167810		10/1986
JP	1-195803		8/1989
JP	2136505		5/1990
JP	2279103		11/1990
JP	3-85102		4/1991
JP	3086101		4/1991
JP	4-279102		10/1992
JP	5-123204		5/1993
NZ	189890		9/1981
WO	WO 87/07480		12/1987
WO	WO 87/07481		12/1987
WO	WO 88/08263		11/1988
WO	WO 89/06500		7/1989
WO	WO 908/00358		1/1990
WO	WO 91/00698		1/1991
WO	WO 91/03180		3/1991
WO	WO 91/04683		4/1991
WO	WO 91/05491		5/1991
WO	WO 91/10377		7/1991
WO	WO 91/11124		8/1991
WO	WO 91/11924		8/1991
WO	WO 91/19429		12/1991
WO	WO 92/07483		5/1992
WO	WO 92/18024		10/1992
WO	WO 93/13928		7/1993
WO	WO 94/03080		2/1994
WO	WO 9614768	A1 *	5/1996
WO	WO 97/00029		1/1997
WO	WO 00/54616		9/2000
WO	WO 00/64293		11/2000
WO	WO 00/70981		11/2000
WO	WO 01/80678		11/2001
WO	WO 02/09547		2/2002
WO	WO 2005/115190		12/2005
WO	WO 2005/117628		12/2005
WO	WO 2005/117629		12/2005
WO	WO2006058013		6/2006
WO	WO 2006/113212		10/2006
WO	WO 2006/124116		11/2006
WO	WO 2007/024523		3/2007
WO	WO2008013594		1/2008

OTHER PUBLICATIONS

Examiner's Comments, European Search Report EP-05825112.5-2318 (Jul. 14, 2010).
adidas Catalog 1986.
adidas Catalog 1988.
adidas Catalog 1989.
adidas Catalog 1990.
adidas Catalog 1991.
adidas Catalog, Spring 1987.
adidas' Second Supplemental Responses to Interrogatory No. 1.
adidas shoe, Model "Buffalo" 1985.
adidas shoe, Model "London", 1986.
adidas shoe, Model "Marathon 86" 1985.
adidas shoe, Model "Skin Racer", 1988.
adidas shoe, Model "Tokio H" 1985.
adidas shoe, Model "Torsion Grand Slam Indoor," 1989.
adidas shoe, Model <<Boston Super>> 1985.
adidas shoe, Model <<Fire>> 1985.
adidas shoe, Model <<Indoor Pro>> 1987.
adidas shoe, Model <<Kingscup Indoor>>, 1986.
adidas shoe, Model <<Marathon>> 1986.
adidas shoe, Model <<Questar>>, 1986.
adidas shoe, Model <<Tauern>> 1986.
adidas shoe, Model <<Tennis Comfort>>, 1988.
adidas shoe, Model <<Torsion Special HI>> 1989.
adidas shoe, Model <<Torsion ZX9020S>> 1989.
adidas shoe, Model <<Water Competition>> 1980.
adidas shoe, Model, <<Indoor Pro>> 1987.
adidas Spring Catalog 1989.
Areblad et al. <<Three-Dimensional Measurement of Rearfoot Motion During Running>> *Journal of Biomechanics*, vol. 23, vol. 9, pp. 933-940 (1990).

(56) **References Cited**

OTHER PUBLICATIONS

AVIA Catalog 1986.
Avia Fall Catalog, 1988.
Brooks Catalog 1986.
Cavanagh et al., "Biomechanics of Distance Running," Human Kinetics Books, pp. 155-164, 1990.
Clark Shoe Designed by Sven Coomer 1991.
Fineagan, "Comparison of the Effects of a Running Shoe and A Racing Flat on the Lower Extremity Biochemical Alignment of Runners," *Journal of the American Physical Therapy Association*, vol. 68, No. 5, p. 806 (1988).
Fixx, *The Complete Book of Running*, pp. 134-137, 1977.
Footwear Journal, Nike Advertisement, Aug. 1987.
Footwear News, vol. 44, No. 37, Nike Advertisement (1988).
Footwear News, Special Supplement, Feb. 8, 1988.
Footwear News, vol. 45, No. 5, Nike Advertisement 1989.
Frederick, *Sports Shoes and Playing Surfaces, Biomechanical Properties*, Entire Book, 1984.
Johnson et al., <<A Biomechanical Approach to the Design of Football Boots>>, *Journal of Biomechanics*, vol. 9, pp. 581-585 (1976).
Komi et al., "Interaction Between Man and Shoe in Running: Considerations for More Comprehensive Measurement Approach," *International Journal of Sports Medicine*, vol. 8, pp. 196-202 1987.
Kronos Catalog, 1988.
K-Swiss Catalog, Fall 1991.
Leuthi et al., <<Influence of Shoe Construction on Lower Extremity Kinematics and Load During Lateral Movements In Tennis>>, *International Journal of Sport Biomechanics*, vol. 2, pp. 166-174, 1986.
Nawoczenski et al., <<Effect of Rocker Sole Design on Plantar Forefoot Pressures>> *Journal of the American Podiatric Medical Association*, vol. 79, No. 9, pp. 455-460, 1988.
Nigg et al., "Biomechanical Aspects of Sport Shoes and Playing Surfaces," Proceedings of the International Symposium on Biomechanical Aspects of Sport Shoes and Playing Surfaces, 1983.
Nigg et al., "Influence of Heel Flare and Midsole Constructions on Pronation" *International Journal of Sport Biomechanics*, vol. 4, No. 3, pp. 205-219 (1987).
Nigg et al., <<The Influence of Lateral Heel Flare of Running Shoes on Pornation and Impact Forces>>, *Medicine and Science in Sports and Exercise*, vol. 19, No. 3, pp. 294-302, 1987.
Nigg et al., *Biomechanics of Running Shoes*, entire book, 1986.
Nigg, <<Biomechanical Analysis of Ankle and foot Movement>> *Medicine and Sport Science*, vol. 23, pp. 22-29 1987.
Nike Catalog, Footwear Fall, 1988.
Nike Fall Catalog 1987, pp. 50-51.
Nike Shoe, men's cross-training Model "Air Trainer SC" 1989.
Nike shoe, men's cross training Model <<Air Trainer TW>> 1989.
Nike shoe, Model "Air Force" #1978, 1988.
Nike shoe, Model "Air" #1553, 1988.
Nike shoe, Model <<Air Flow>> #718, 1988.
Nike shoe, Model <<Air Revolution>> #15075, 1988.
Nike shoe, Model <<Air>>, #13213, 1988.
Nike shoe, Model <<Air>>, #4183, 1988.
Nike shoe, Model <<High Jump 88>>, 1988.
Nike shoe, Model <<Leather Cortex®>>, 1988.
Nike shoe, Model <<Zoom Street Leather>> 1988.
Nike Spring Catalog 1989 pp. 62-63.
Palamarchuk et al., "In shoe Casting Technique for Specialized Sport Shoes," *Journal of the American Podiatric Medical Association*, vol. 79, No. 9, pp. 462-465, 1989.
Prince Cross-Sport 1989.
Puma basketball shoe, *The Complete Handbook of Athletic Footwear*, pp. 315, 1987.
Romika Catalog, Summer 1978.
Runner's World, "Shoe Review" Nov. 1988 pp. 46-74.
Runner's World, "Spring Shoe Survey," pp. 45-74, 1989.
Runner's World, Apr. 1988.
Runner's World, Oct. 1986.
Saucony Spot-bilt Catalog 1988.
Saucony Spot-bilt Catalog Supplement, Spring 1985.
Saucony Spot-bilt shoe, *The Complete Handbook of Athletic Footwear*, pp. 332,1987.
Segesser et al., "Surfing Shoe," *The Shoe in Sport*, 1989, (Translation of a book published in Germany in 1987), pp. 106-110.
Sporting Goods Business, Aug. 1987.
Sports Illustrated, Nike Advertisement, Aug. 8, 1988.
Sports Illustrated, Special Preview Issue, The Summer Olympics <<Seoul '88>> Reebok Advertisement.
The Complete Handbook of Athletic Footwear, Entire Boook, 1987.
Vagenas et al., "Evaluation of Rearfoot Asymmetries in Running with Worn and New Running Shoes," *International Journal of Sport Biomechanics*, vol. 4, No. 3, pp. 220-230 (1988).
Valiant et al., <<A Study of Landing from a Jump:Implications for the Design of a Basketball Shoe>>, *Scientific Program of IX International Congress of Biomechanics*, 1983.
Williams et al., <<The Mechanics of Foot Action During the Golf Swing and Implications for Shoe Design>>, *Medicine and Science in Sports and Exercise*, vol. 15, No. 3, pp. 247-255, 1983.
World Professional Squash Association Pro Tour Program, 1982-1983.
Williams, Walking on Air, *Case Alumnus*, vol. LXVII, No. 6, Fall 1989, pp. 4-8.
Brooks advertisement in *Runner's World* etc., Jun. 1989, pp. 56+.
Cavanaugh et al., Biological Aspects of Modeling Shoe/Foot Interaction During Running, *Sports Shoes and Playing Surfaces*, 1984, pp. 24-25, 32-35, 46.
Blechschmidt, The Structure of the Calcaneal Padding, *Foot & Ankle* vol. 2, No. 5, Mar. 1982, pp. 260-283.
Cavanaugh "The Running Shoe Book," © 1980, pp. 176-180, Anderson World, Inc., Mountain View, CA.
Executive Summary with Seven Figures, 1993.
German Description of adidas badminton shoe, pre-1989(?), 1 page.
The Reebok Lineup, Fall 1987, 2 pages.
Related US specification available upon request: U.S. Appl. No. 09/908,688, filed Jul. 20, 2001.
Related US specification available upon request: U.S. Appl. No. 08/477,640, filed Jun. 7, 1995.
Related US specification available upon request: U.S. Appl. No. 09/648,792, filed Aug. 28, 2000.
Related US specification available upon request: U.S. Appl. No. 08/376,661, filed Jan. 23, 1995.
Related US specification available upon request: U.S. Appl. No. 09/710,952, filed Nov. 14, 2000.
Related US specification available upon request: U.S. Appl. No. 09/780,450, filed Feb. 12, 2001.
Related US specification available upon request: U.S. Appl. No. 09/790,626, filed Feb. 23, 2001.
Related US specification available upon request: U.S. Appl. No. 09/734,905, filed Dec. 13, 2000.
Related US specification available upon request: U.S. Appl. No. 09/785,200, filed Feb. 20, 2001.
Related US specification available upon request: U.S. Appl. No. 09/907,598, filed Jul. 19, 2001.
Related US specification available upon request: U.S. Appl. No. 09/794,943, filed Oct. 12, 2001.
Related US specification available upon request: U.S. Appl. No. 09/974,786, filed Oct. 12, 2001.
Related US specification available upon request: U.S. Appl. No. 08/452,490, filed May 30, 1995.
Related US specification available upon request: U.S. Appl. No. 08/473,974, filed Jun. 7, 1995.
Related US specification available upon request: U.S. Appl. No. 08/482,838, filed Jun. 7, 1995.
Related US specification available upon request: U.S. Appl. No. 08/033,468, filed Mar. 18, 1993.
Related US specification available upon request: U.S. Appl. No. 08/462,531, filed Jun. 5, 1995.
Related US specification available upon request: U.S. Appl. No. 08/473,212, filed Jun. 7, 1995.
Related US specification available upon request: U.S. Appl. No. 11/831,645, filed Jul. 31, 2007.
Related US specification available upon request: U.S. Appl. No. 11/738,947, filed Apr. 23, 2007.

(56) **References Cited**

OTHER PUBLICATIONS

Related US specification available upon request: U.S. Appl. No. 11/179,887, filed Jul. 12, 2005.
Related US specification available upon request: U.S. Appl. No. 11/282,665, filed Nov. 21, 2005.
Related US specification available upon request: U.S. Appl. No. 11/190,087, filed Jul. 26, 2005.
Related US specification available upon request: U.S. Appl. No. 11/831,597, filed Jul. 31, 2007.
Office Action; Mailed Sep. 24, 2013 for the corresponding U.S. Appl. No. 13/771,214.

* cited by examiner

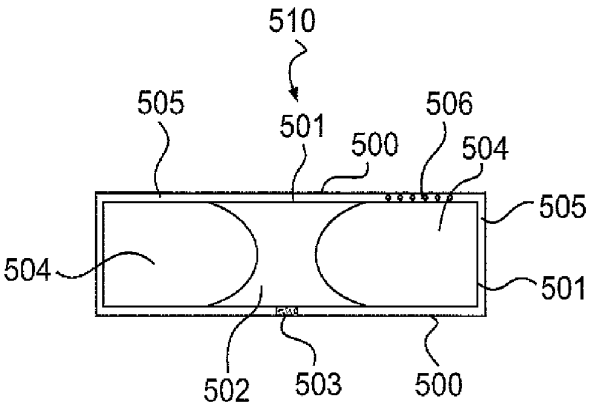

FIG. 1A

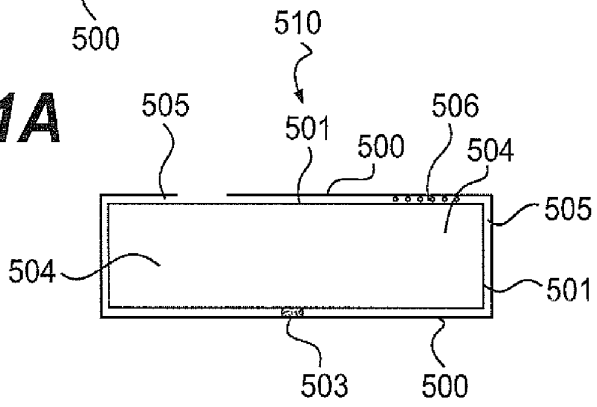

FIG. 2A

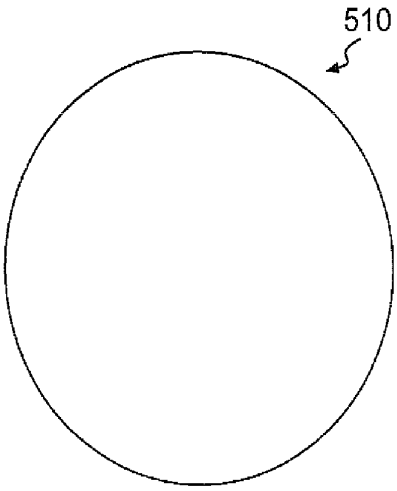

FIG. 1B

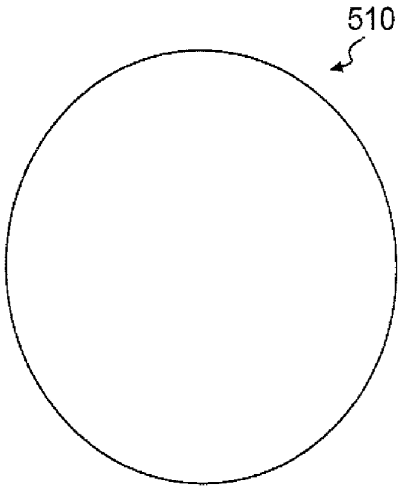

FIG. 2B

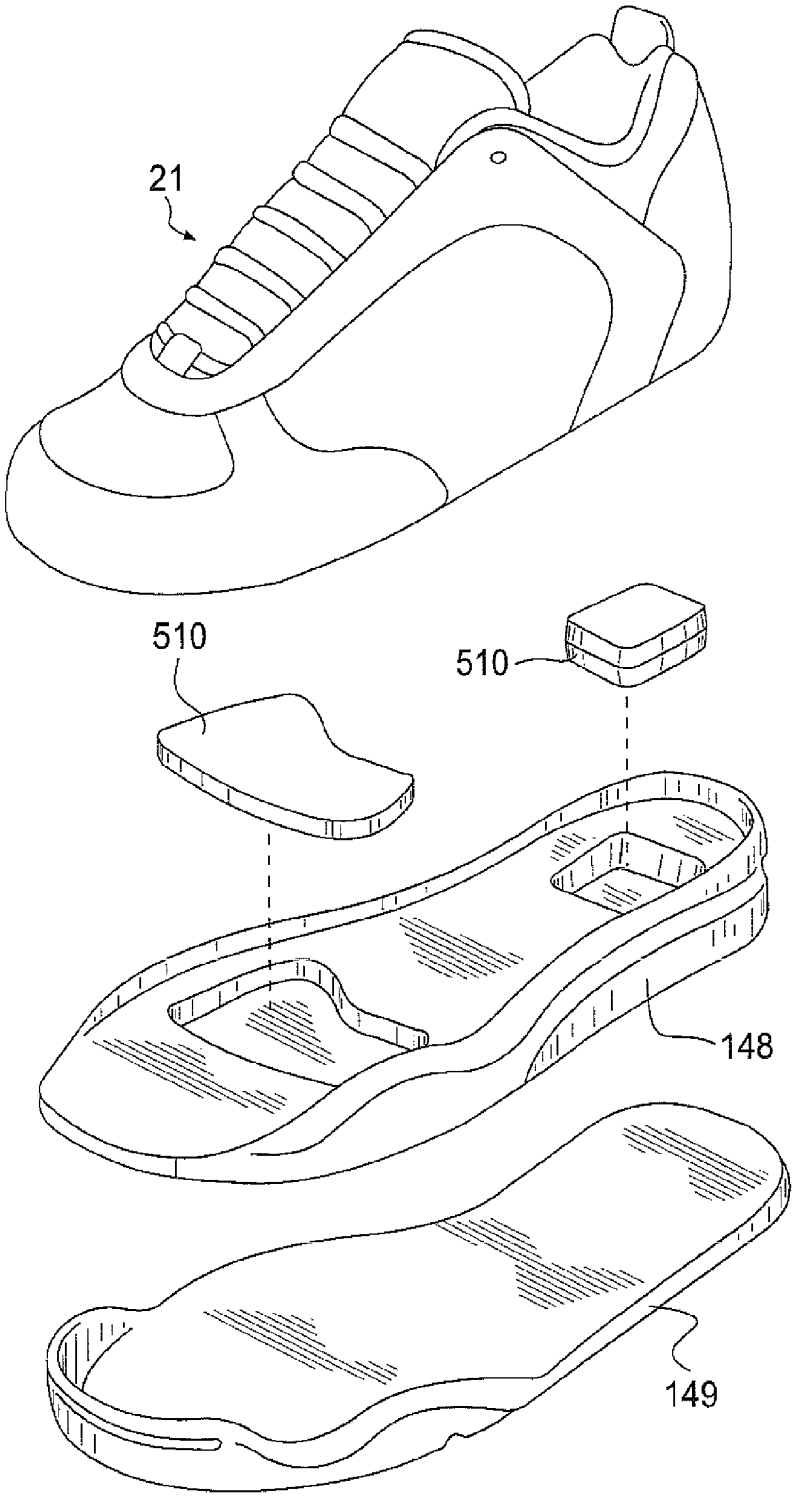

FIG. 1C

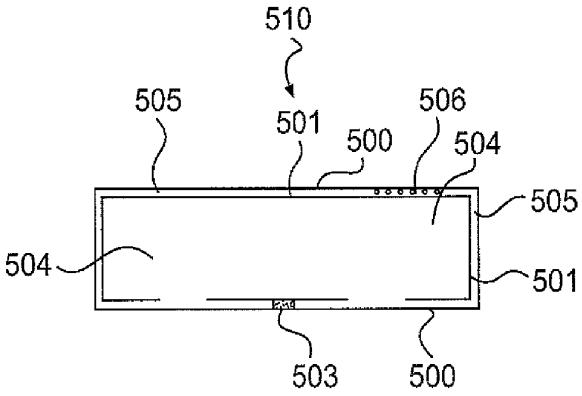

FIG. 3A

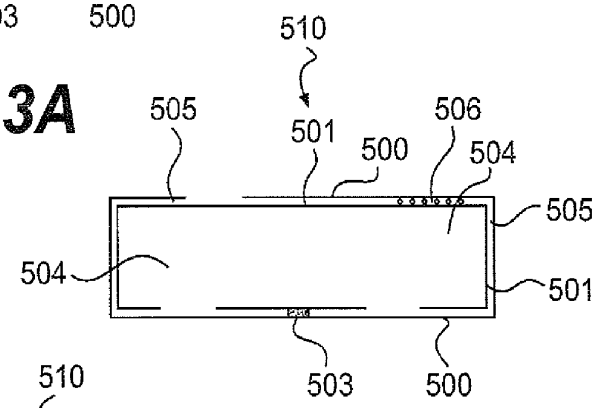

FIG. 4A

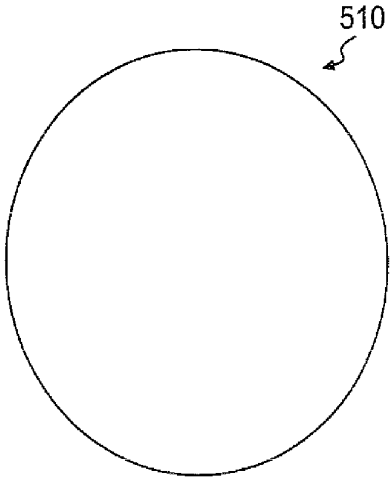

FIG. 3B

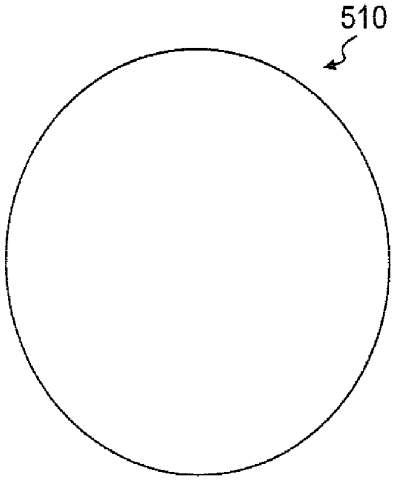

FIG. 4B

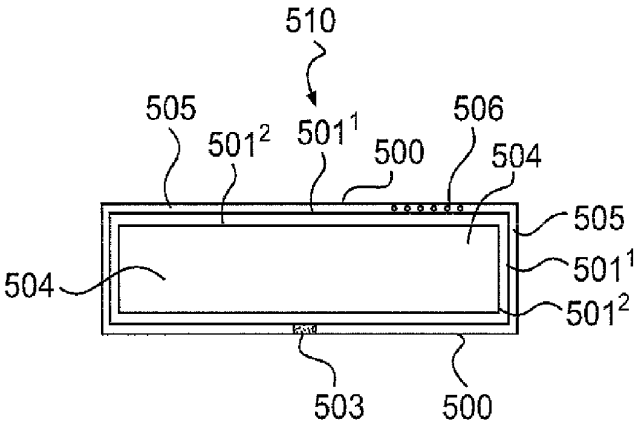

FIG. 5A

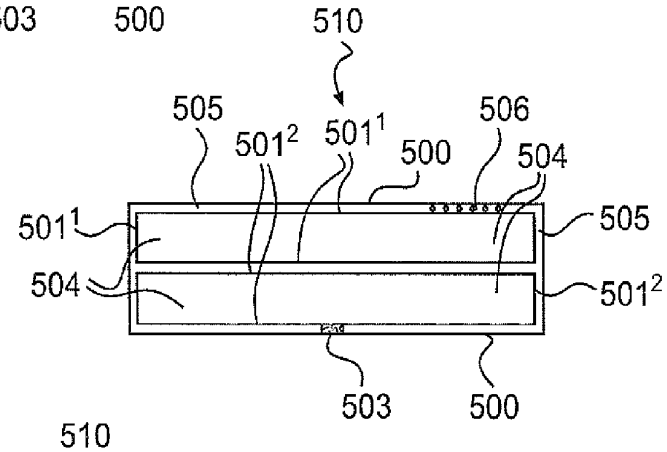

FIG. 6A

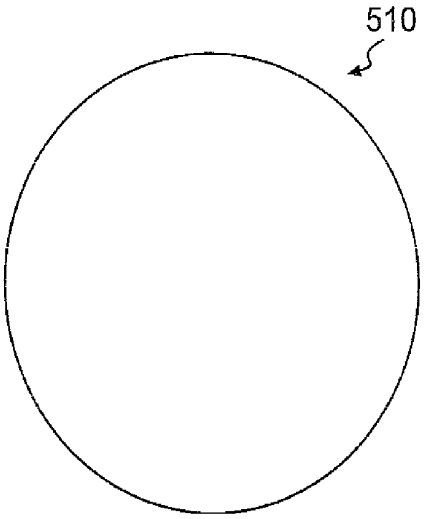

FIG. 5B

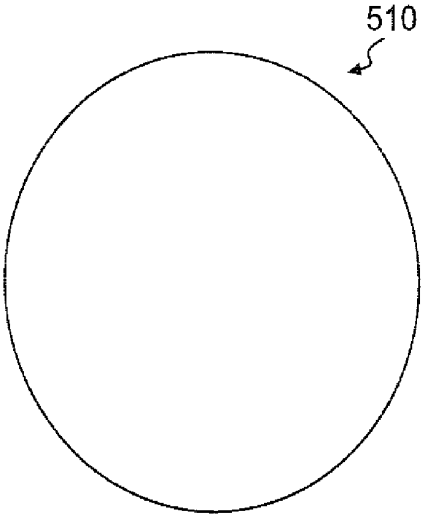

FIG. 6B

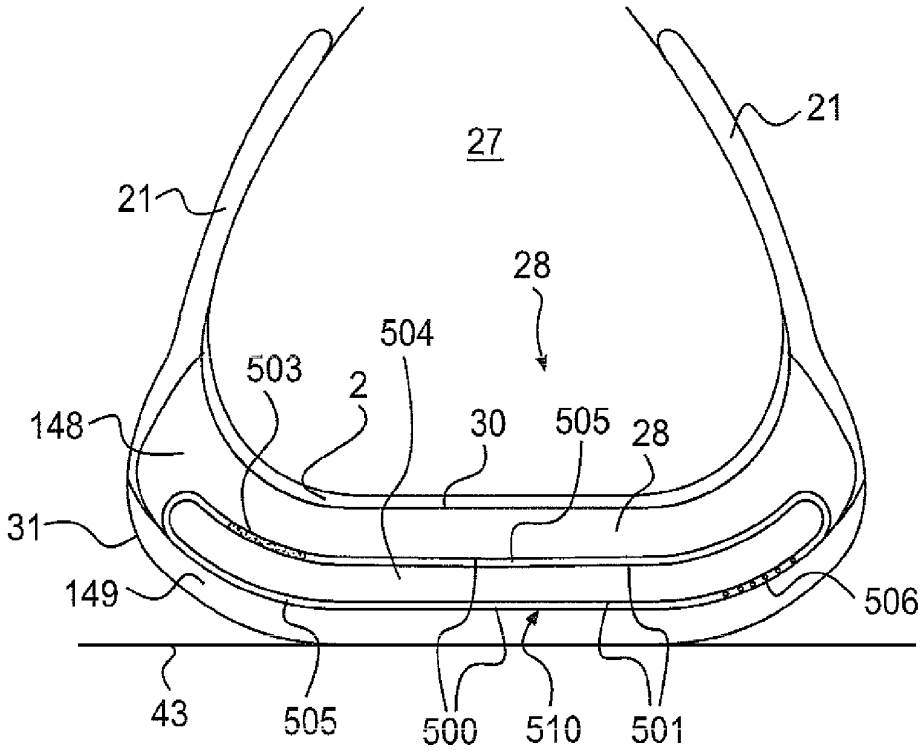

FIG. 7

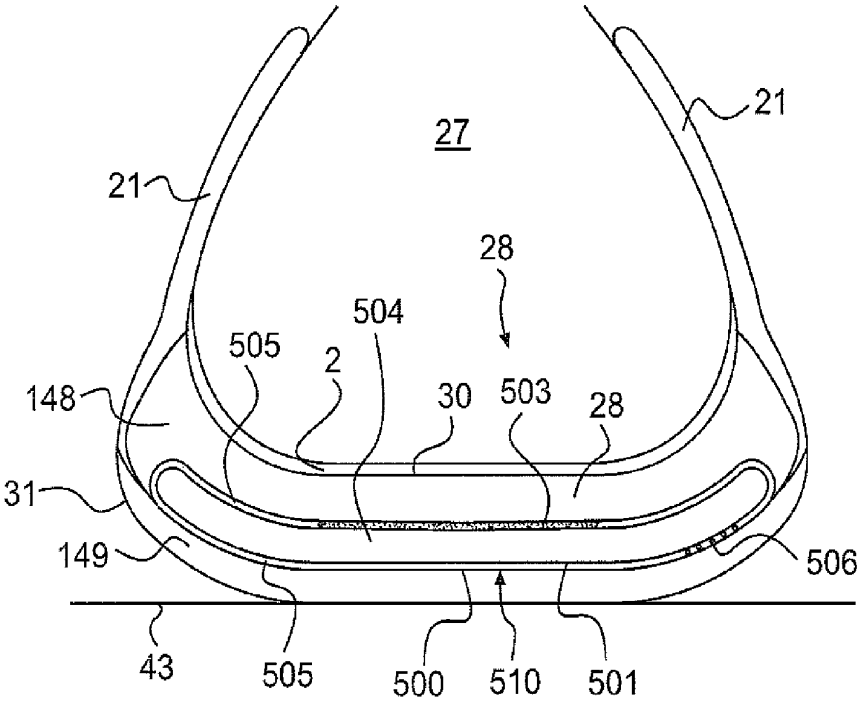
27
21
21
28
504
505
2
30
503
28
148
31
149
506
43
505
500
510
501

FIG. 8

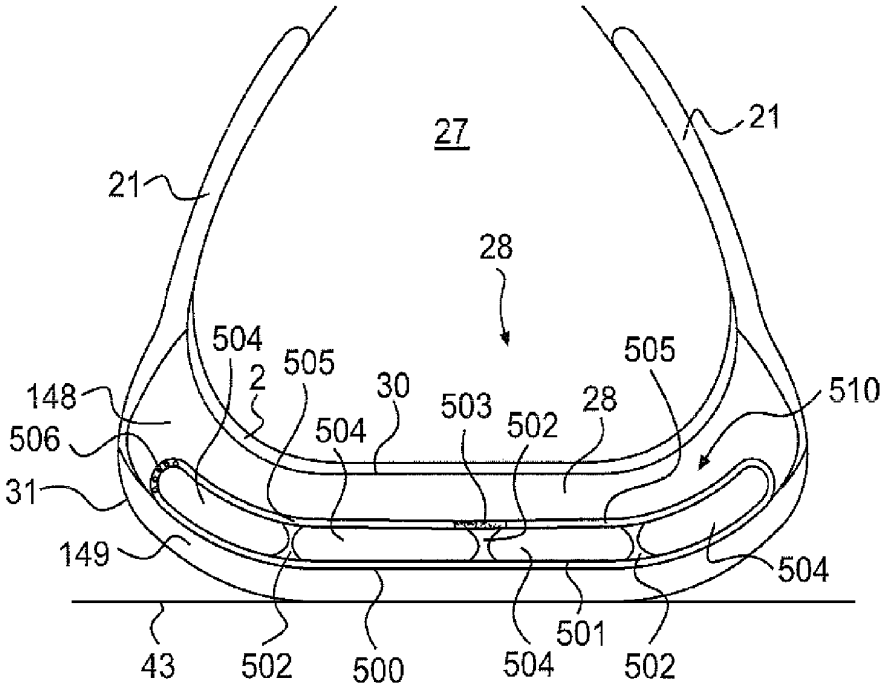
27
21
21
28
504
505
2
505
148
30
503
502
28
510
506
504
31
149
504
43
502
500
504
501
502

FIG. 9

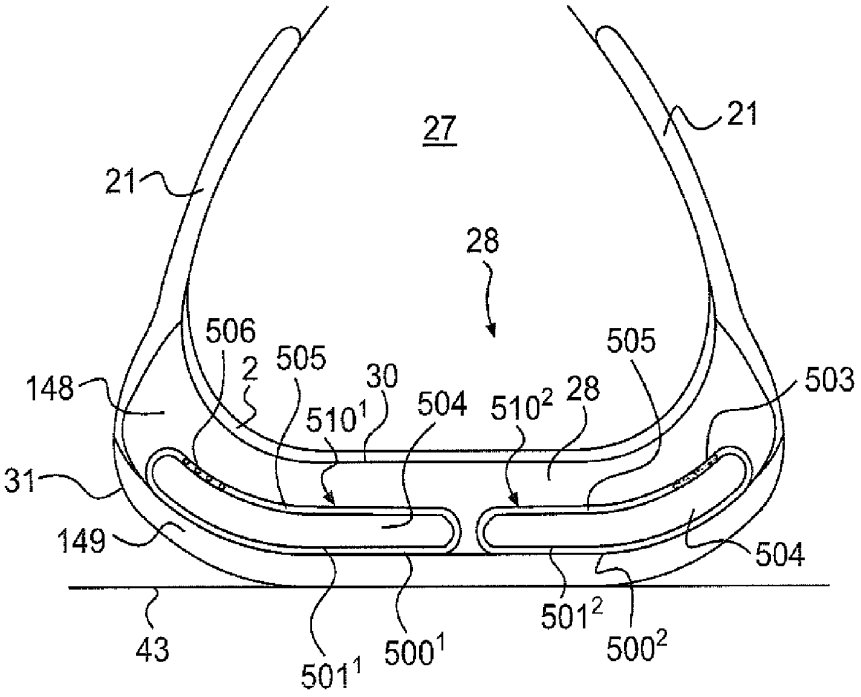
27
21
21
28
506
2
505
30
505
148
503
510^1
504
510^2
28
31
149
504
43
501^2
501^1
500^1
500^2

FIG. 10

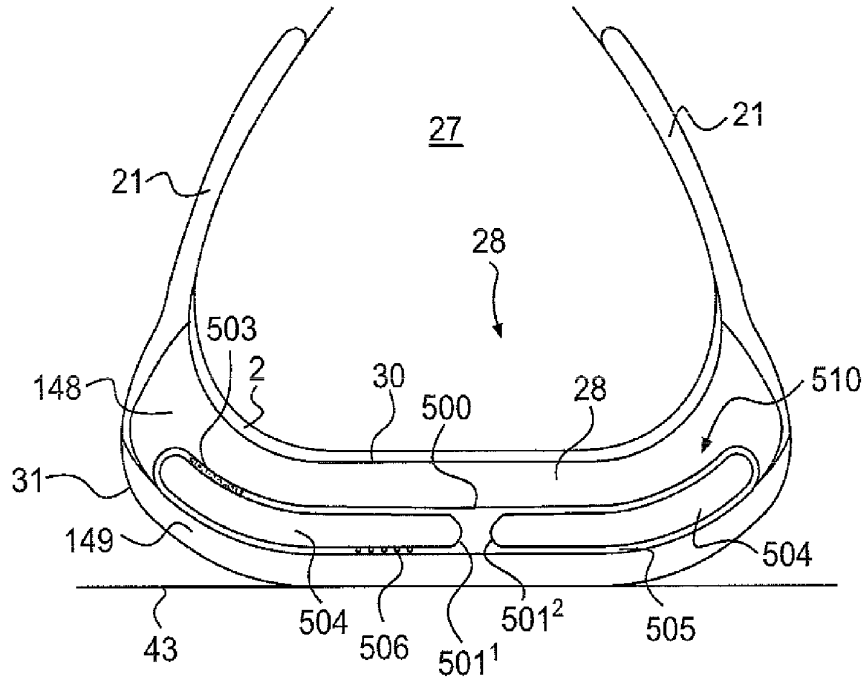
27
21
21
28
503
2
30
500
28
510
148
31
149
504
504
506
501^2
505
43
501^1

FIG. 11

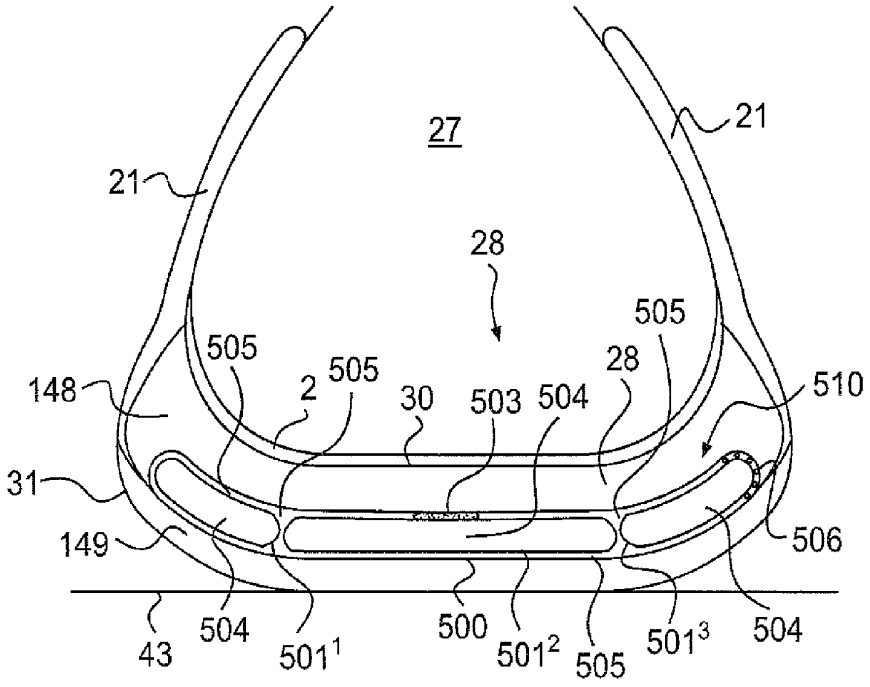
27
21
21
28
505
505
505
2
30
503
504
28
510
148
31
149
506
43
504
501¹
500
501²
505
501³
504

FIG. 12

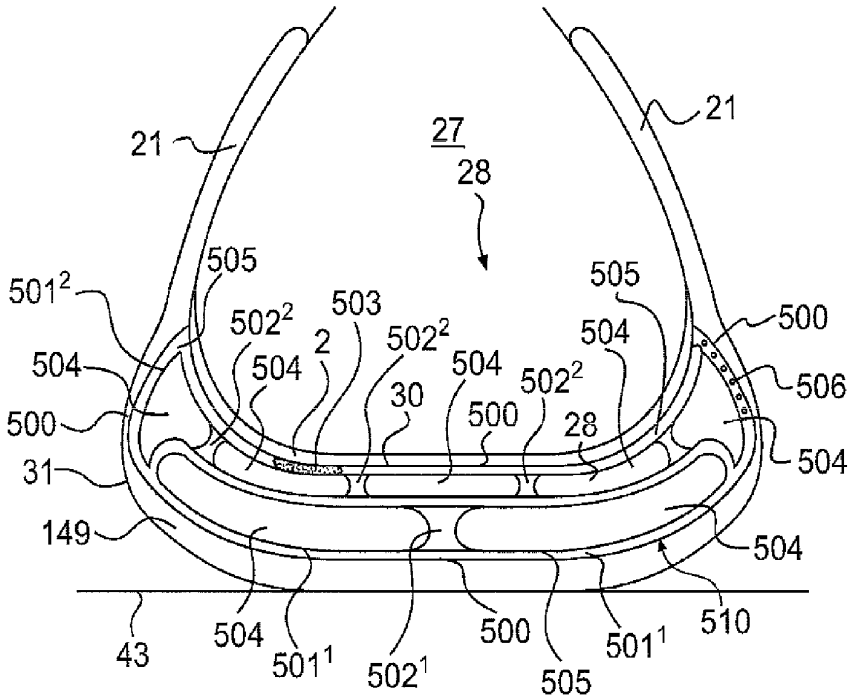
27
21
21
28
505
505
501²
502²
503
502²
504
500
504
2
504
502²
506
30
500
28
500
504
31
149
504
43
504
501¹
502¹
500
505
501¹
510

FIG. 13

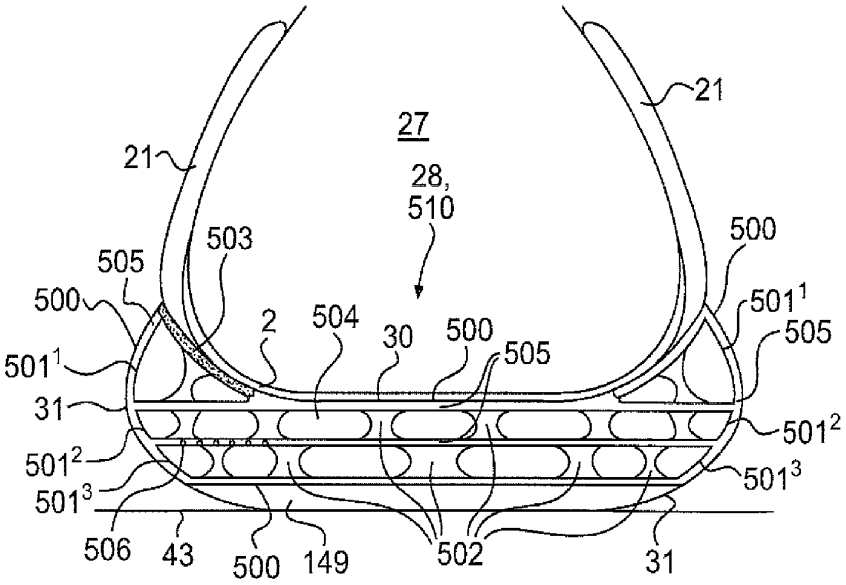
27
28,
510
21
21
503
505
500
500
501¹
2
504
30
500
505
501¹
505
31
501²
501²
501³
501³
506
43
500
149
502
31

FIG. 14

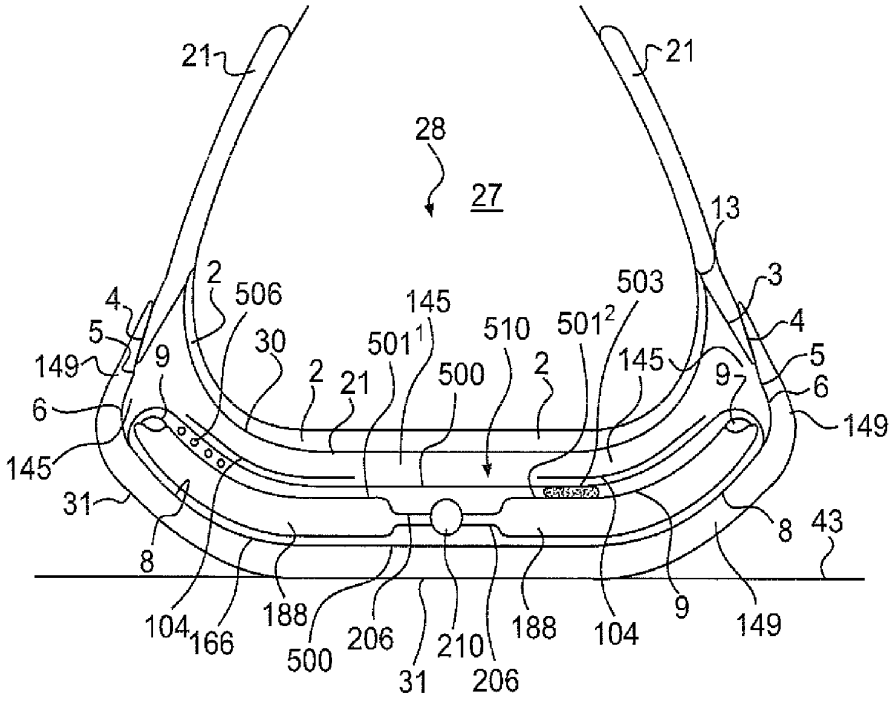
21
21
28
27
13
2
506
145
503
3
4
4
5
30
501¹
510
501²
5
149
9
2
21
500
2
145
9
6
6
149
145
31
8
8
43
104
166
188
500
206
210
188
104
9
149
31
206

FIG. 15

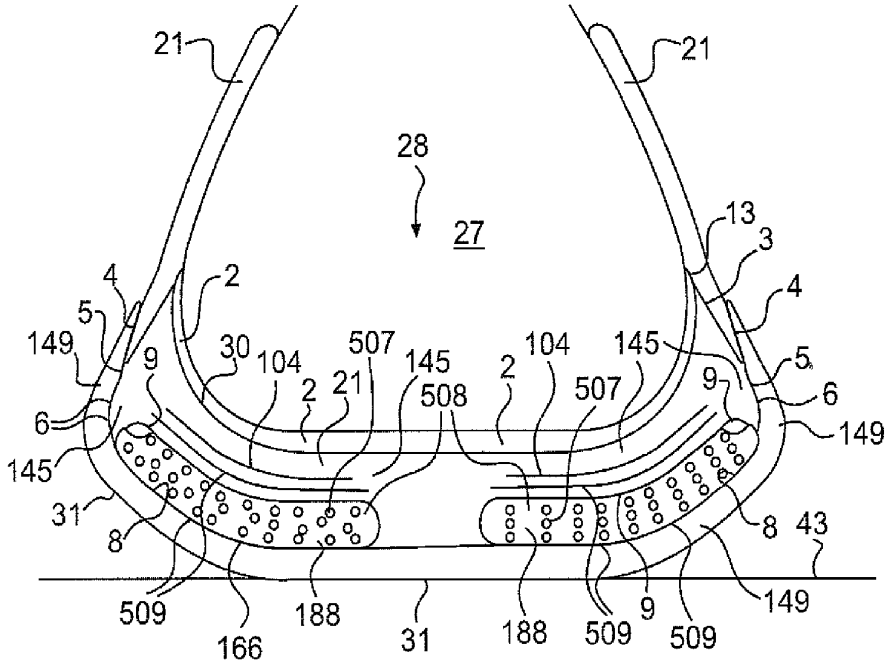

FIG. 16

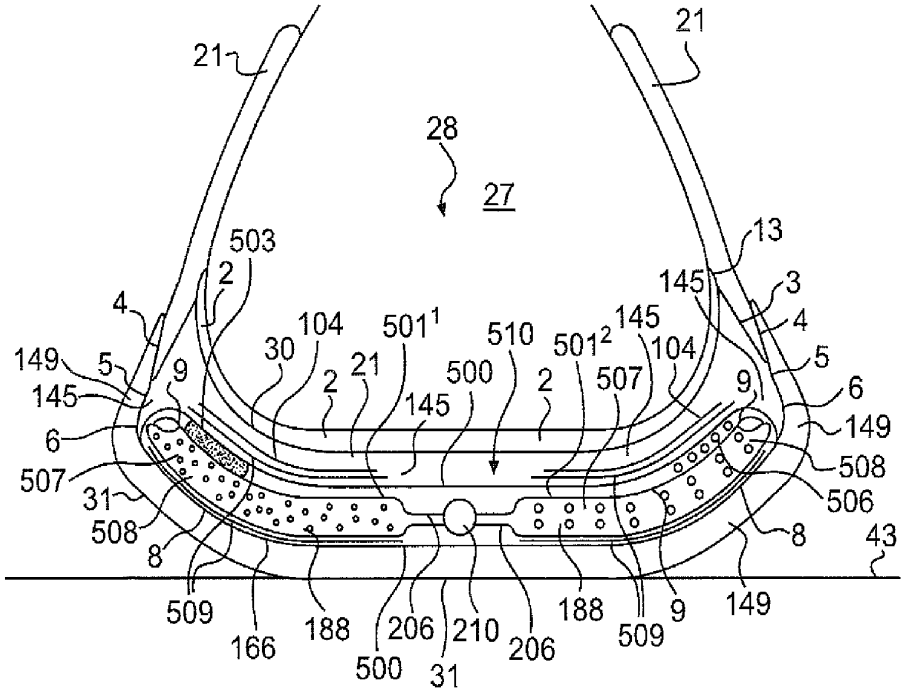

FIG. 17A

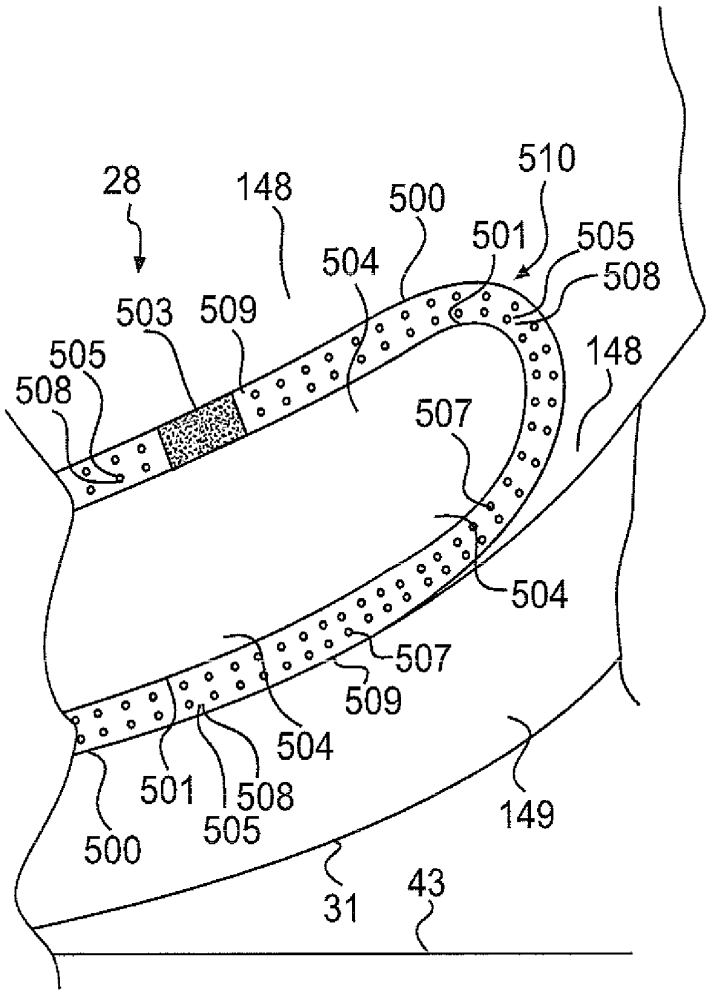
28
148
500
510
501
505
504
508
503
509
505
508
148
507
504
507
509
504
501
508
505
500
149
31
43

FIG. 17B

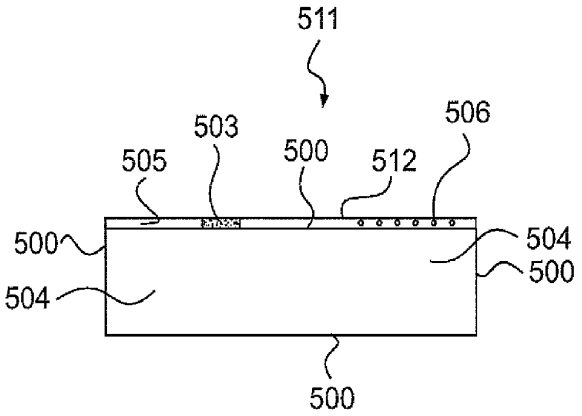

FIG. 18A

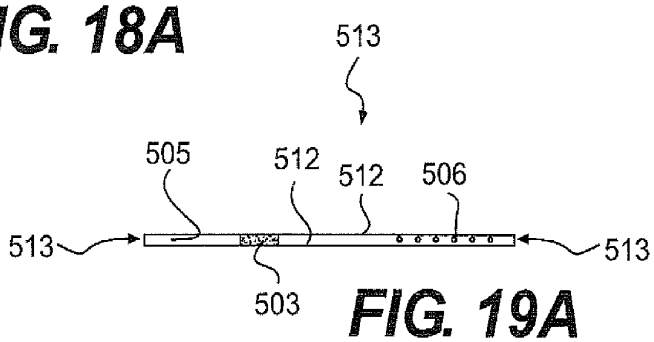

FIG. 19A

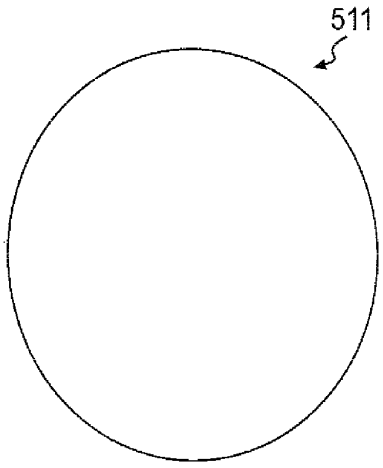

FIG. 18B

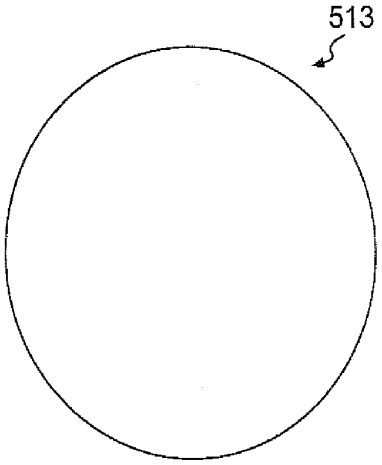

FIG. 19B

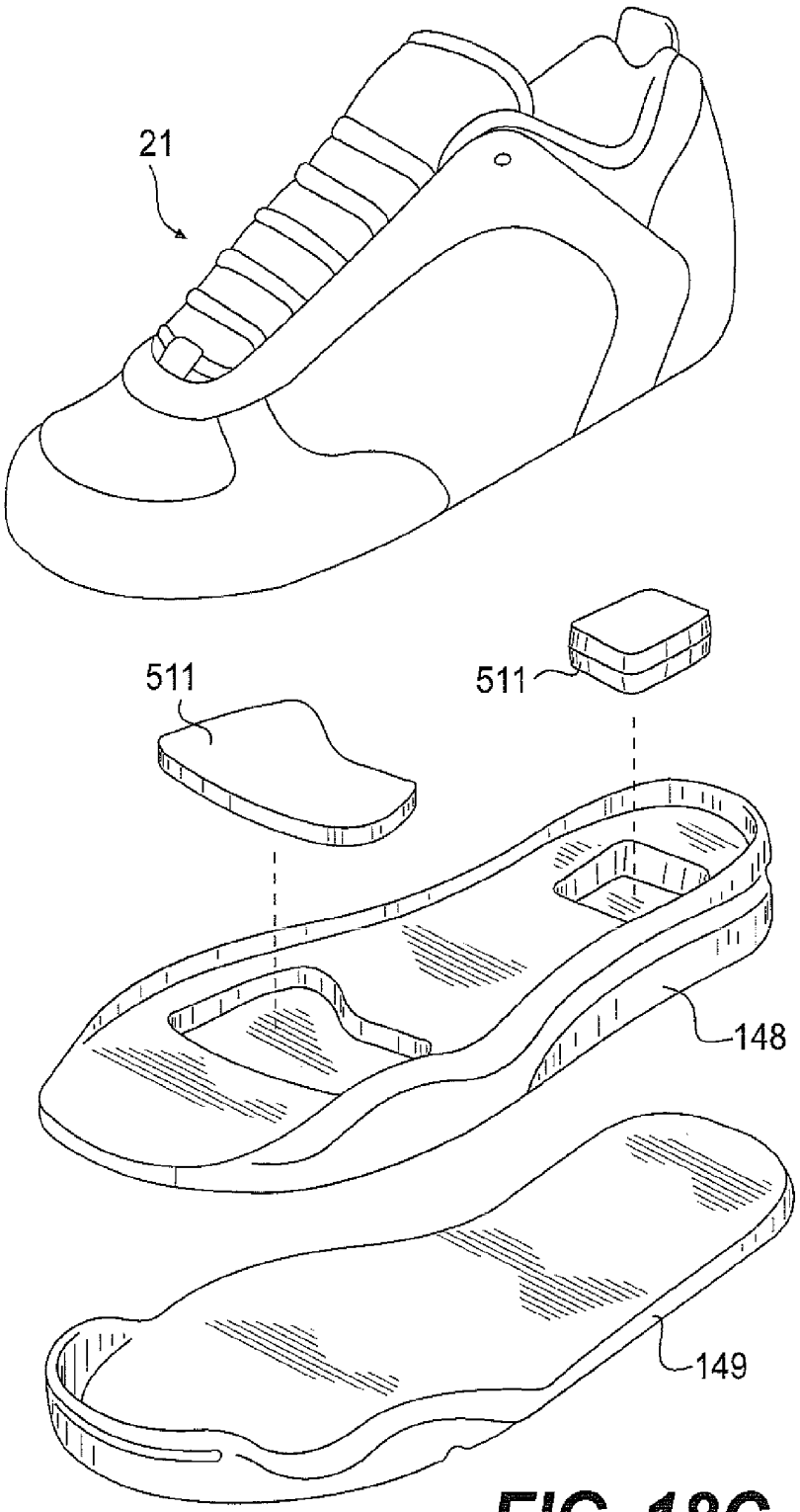

FIG. 18C

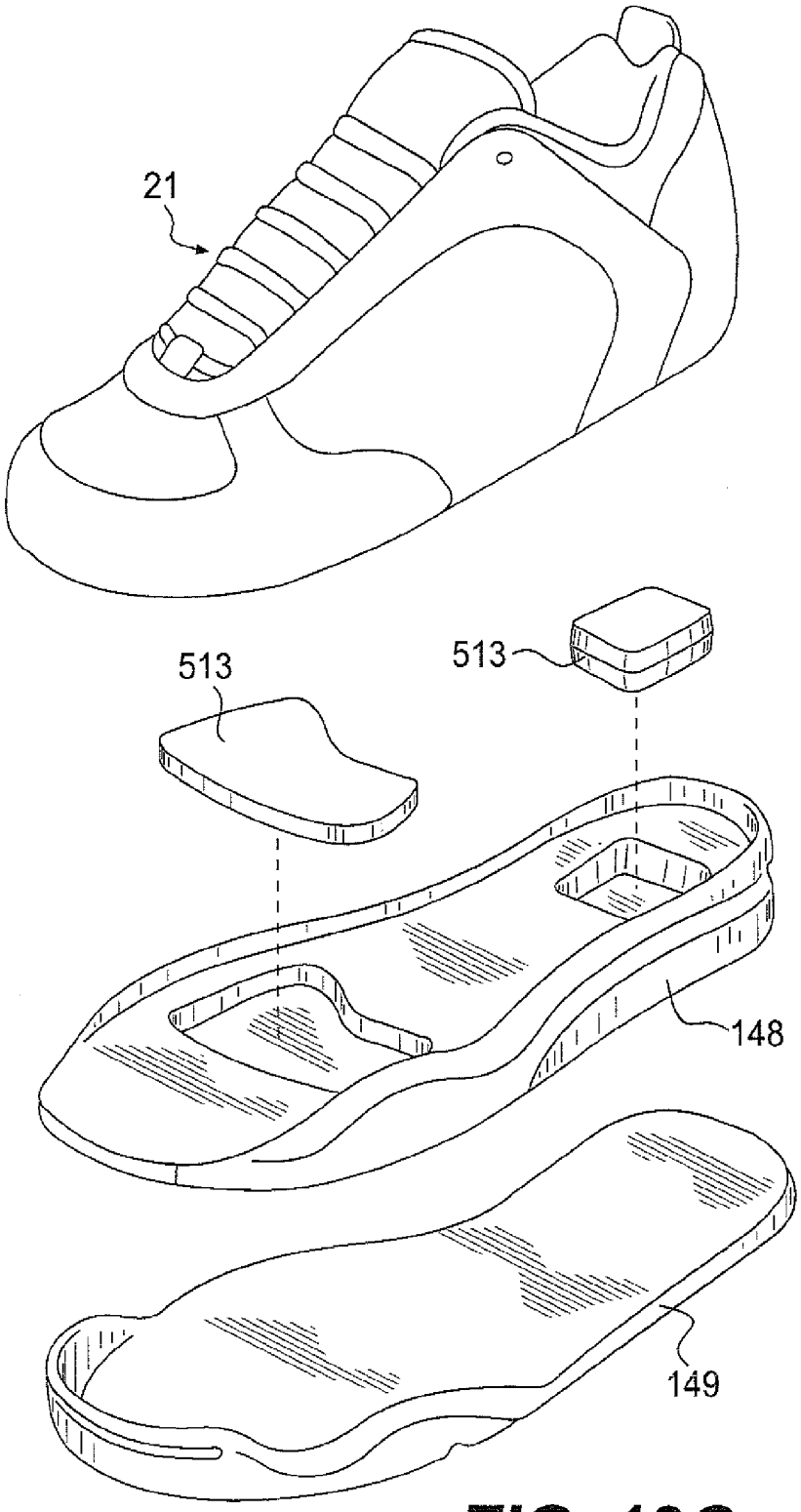

FIG. 19C

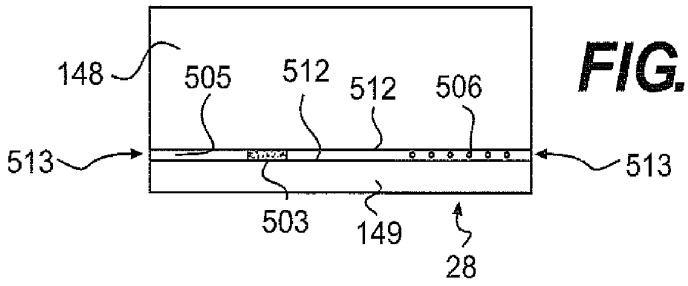

FIG. 20A

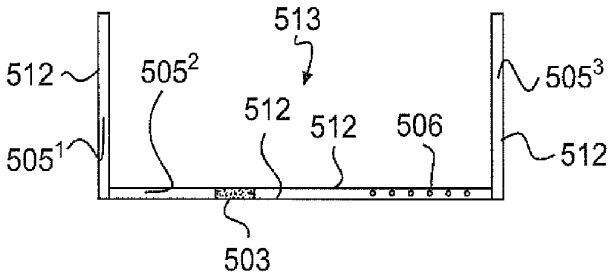

FIG. 21A

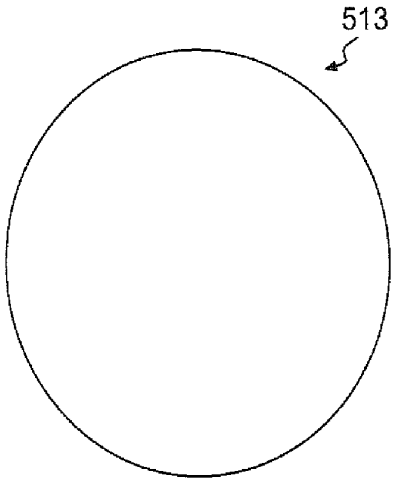

FIG. 20B

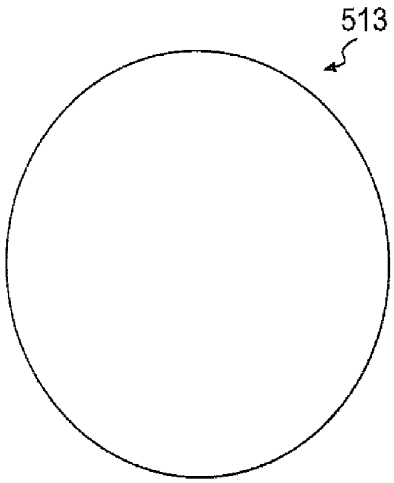

FIG. 21B

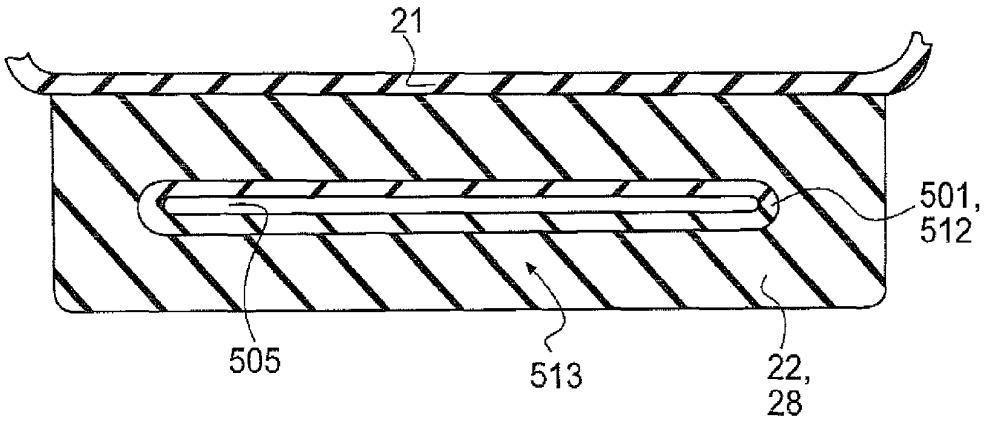

FIG. 20C

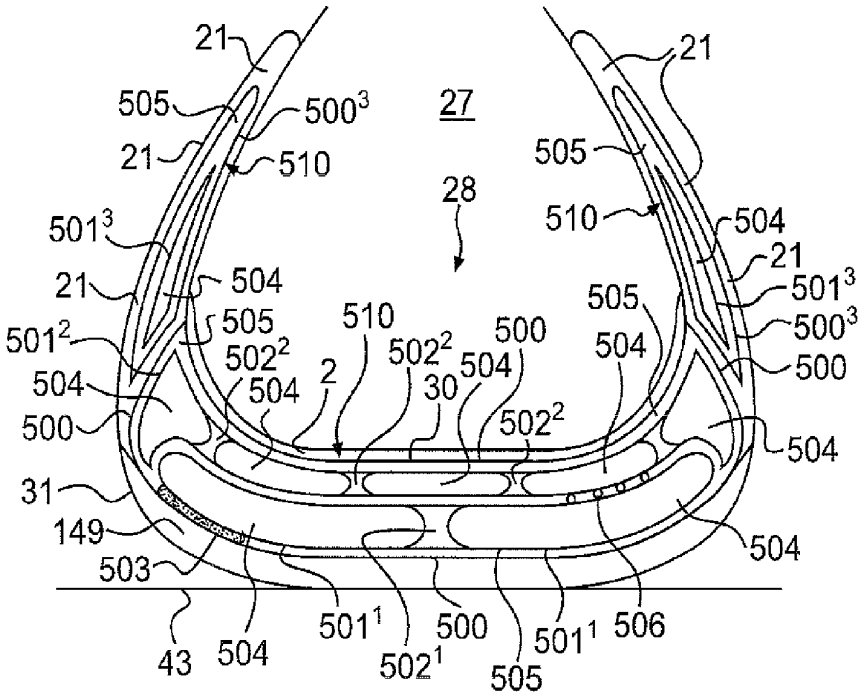
21
505
500³
27
21
510
28
505
510
504
501³
21
504
21
501³
505
510
500
505
500³
501²
502²
502²
504
504
500
504
2
30
504
502²
500
504
31
149
504
503
43
504
501¹
500
501¹
506
502¹
505

FIG. 22

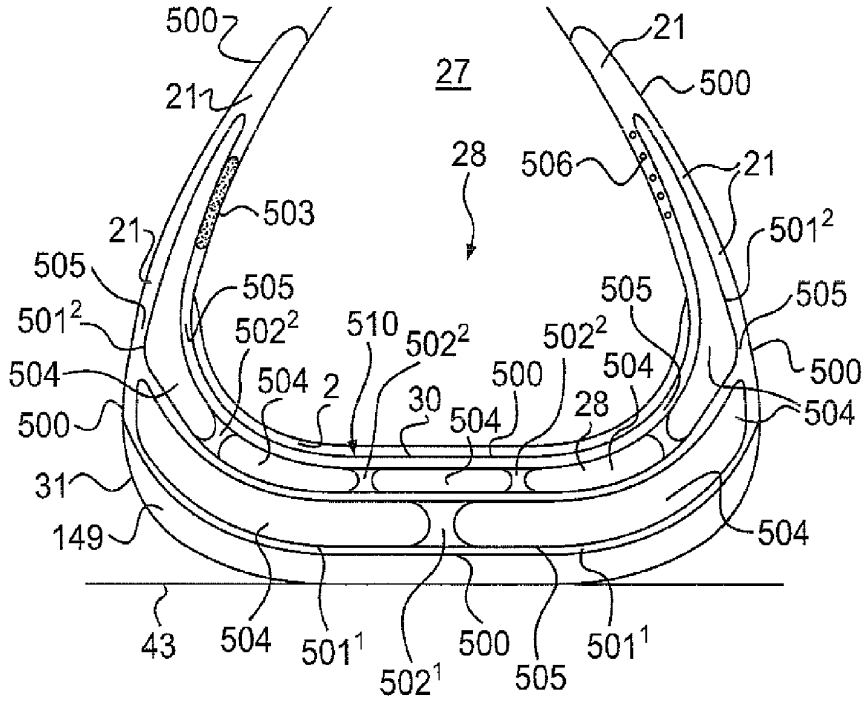
500
21
27
21
500
28
506
21
503
21
501²
505
505
505
505
501²
502²
510
502²
502²
500
504
504
2
30
500
504
28
504
500
31
149
504
43
504
501¹
500
501¹
502¹
505

FIG. 23

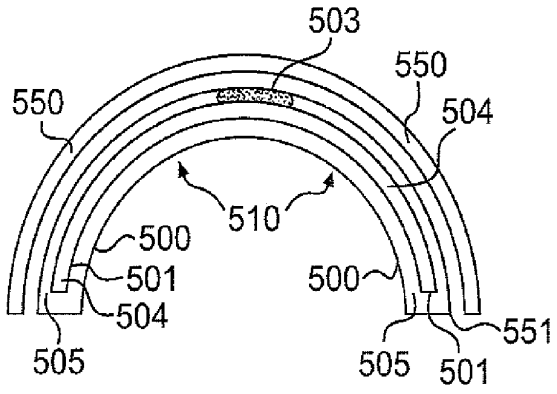

FIG. 24A

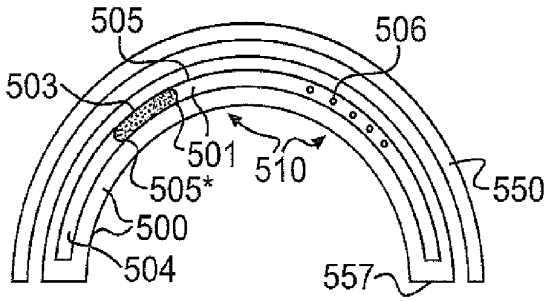

FIG. 24B

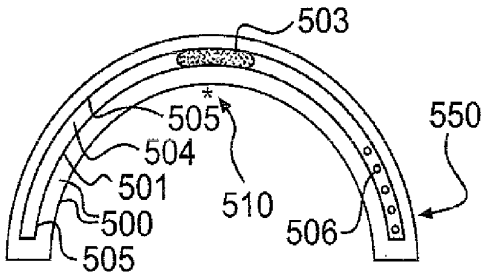

FIG. 24C

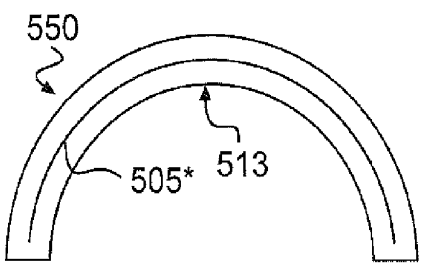

FIG. 24D

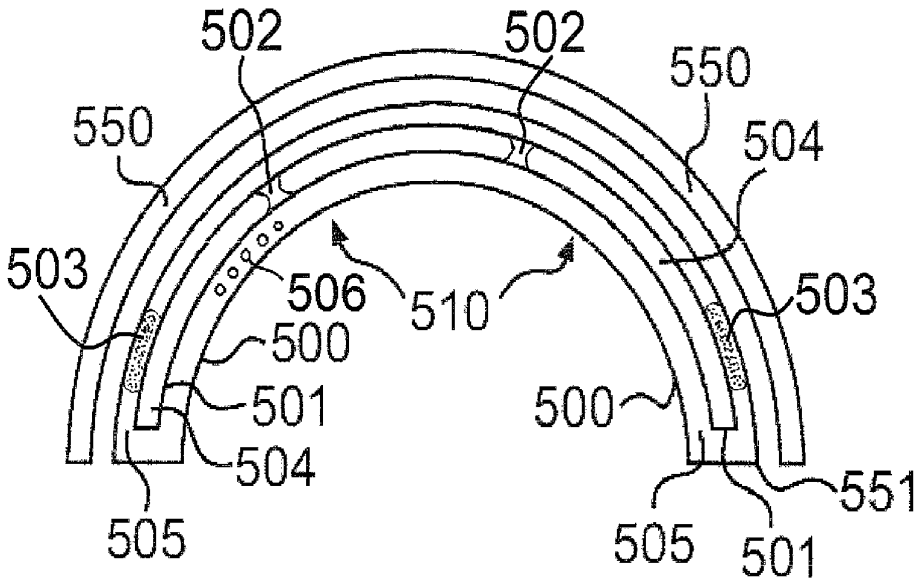
502
502
550
550
504
503
506
510
503
500
501
500
504
551
505
505
501

FIG. 24E

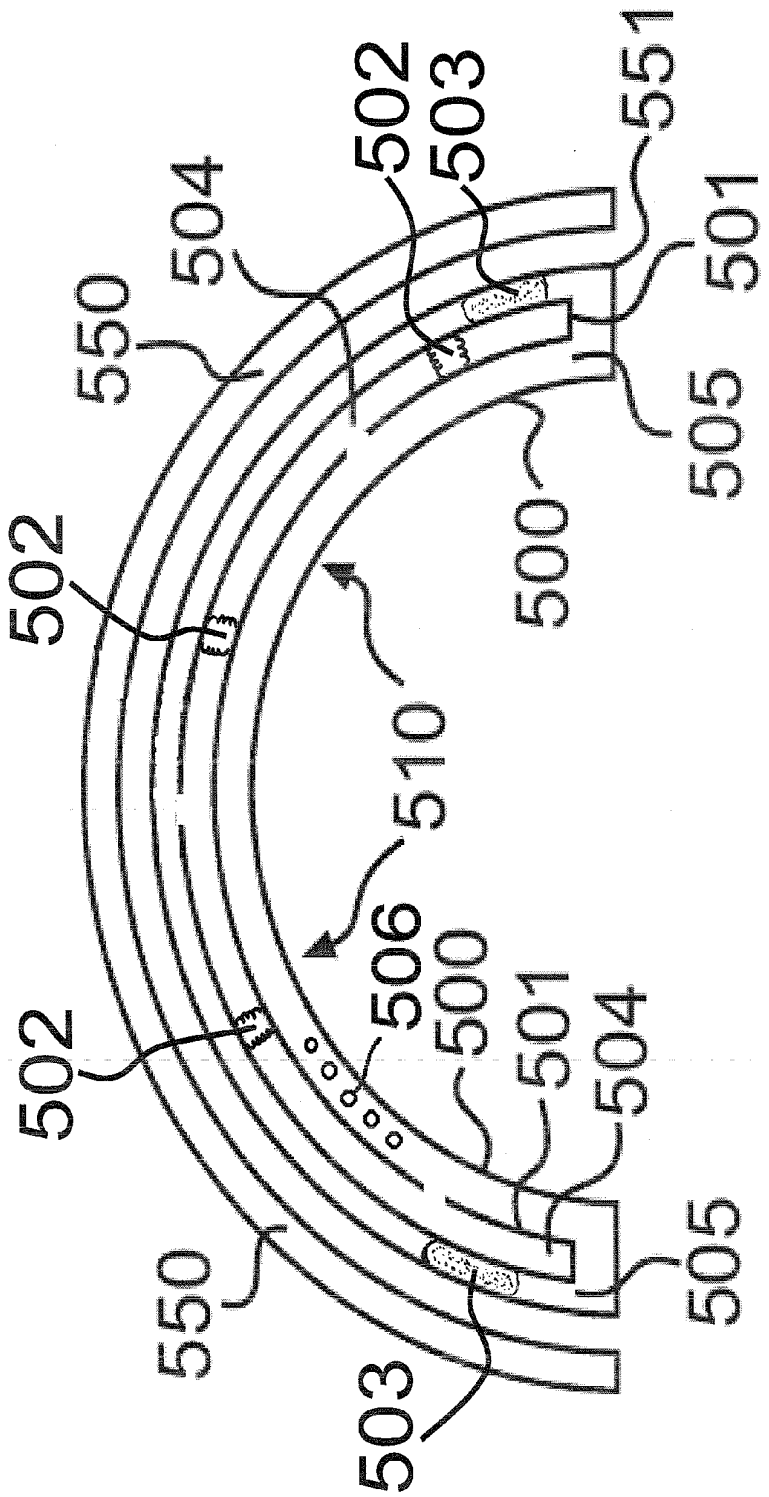
502
503
551
504
501
550
505
500
502
510
506
500
501
504
502
550
505
503

FIG. 24F

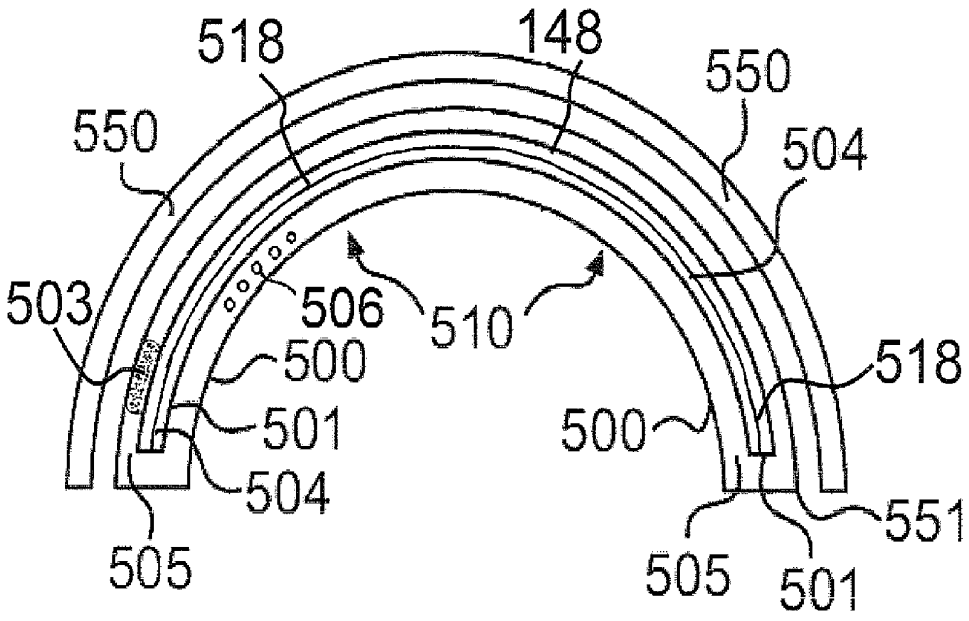
518
148
550
550
504
503
506
510
500
518
501
500
504
551
505
505
501

FIG. 24G

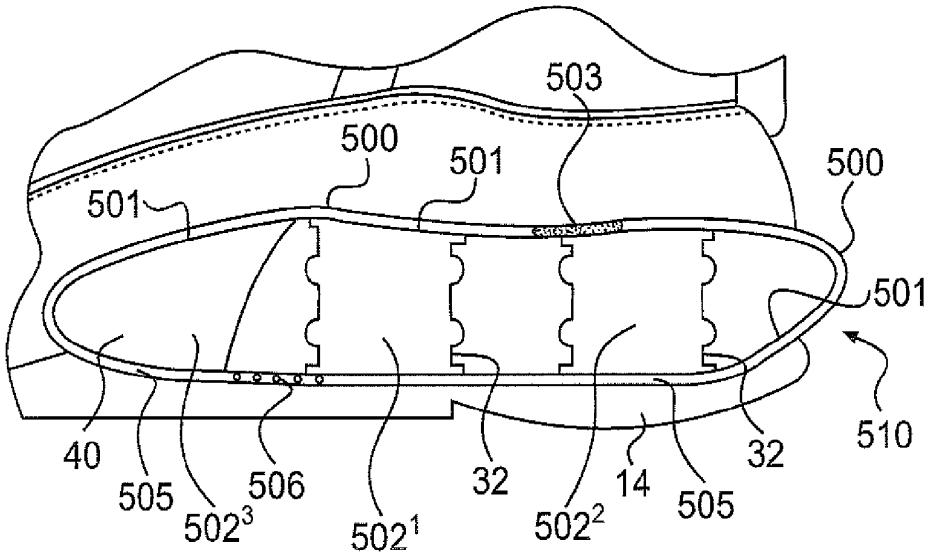

FIG. 25A

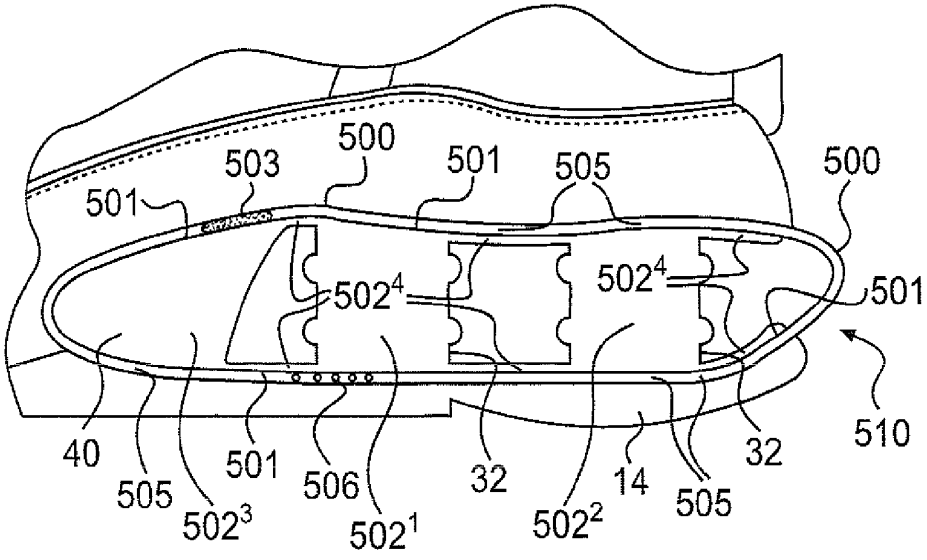

FIG. 25B

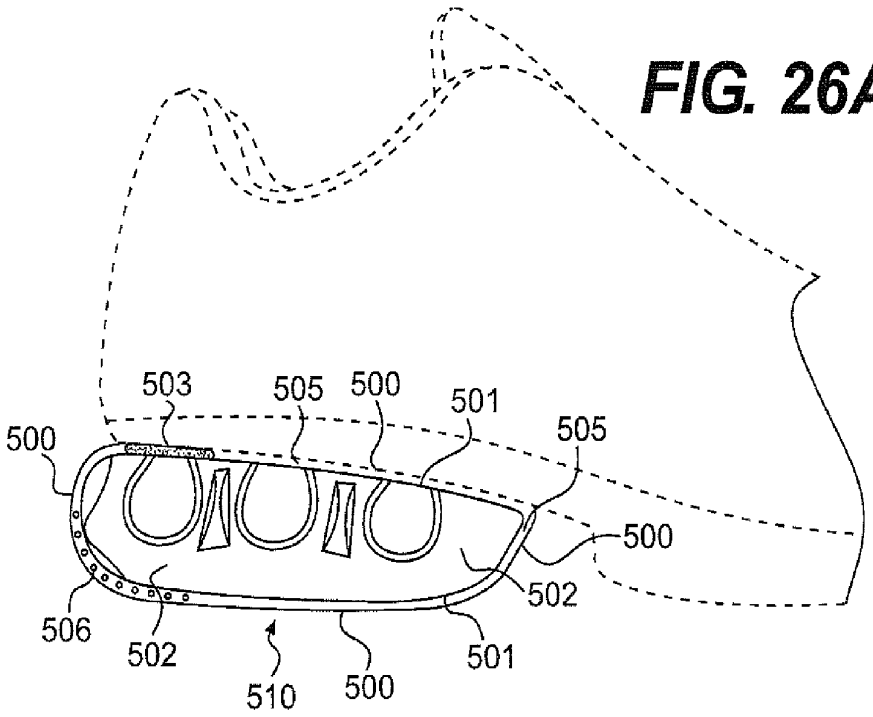

FIG. 26A

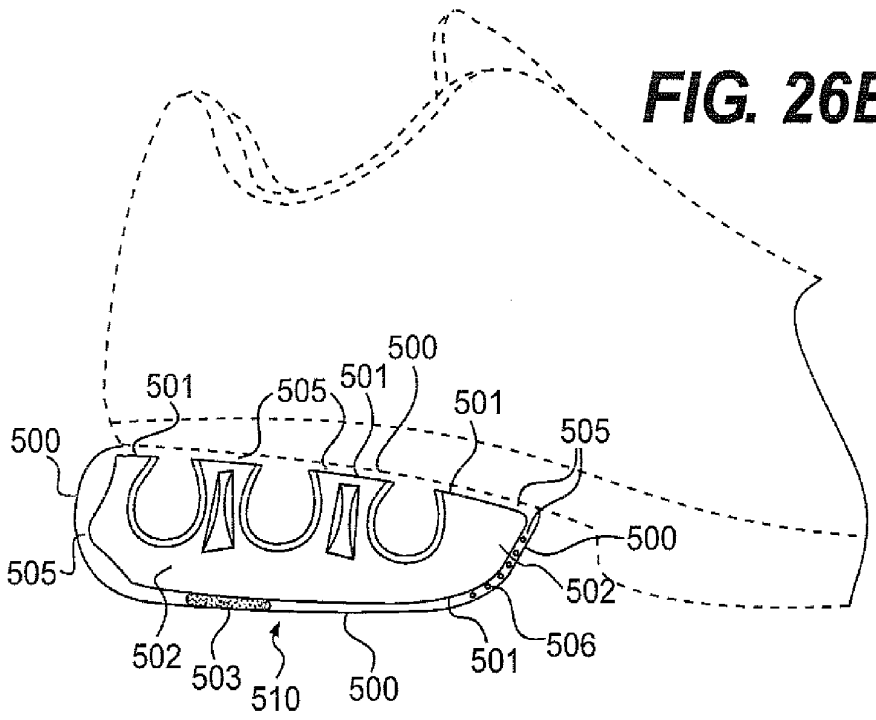

FIG. 26B

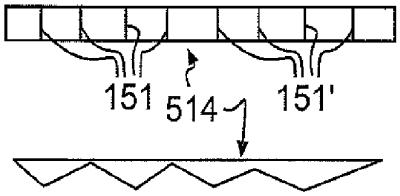

FIG. 26D

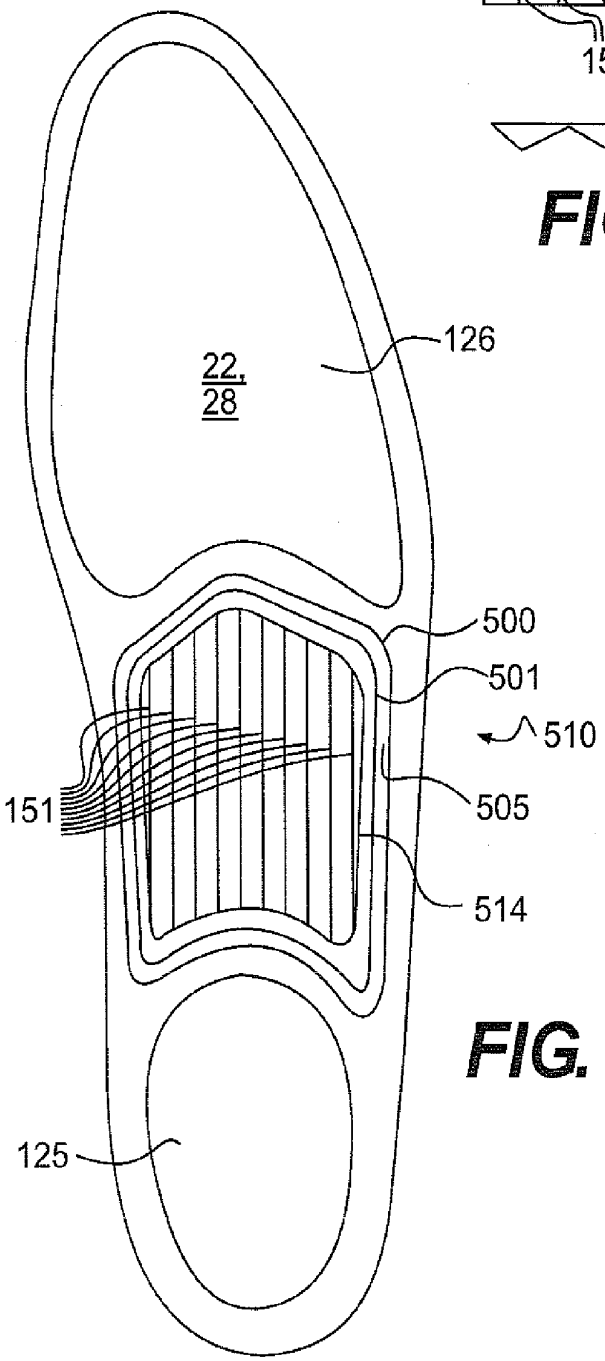

FIG. 26C

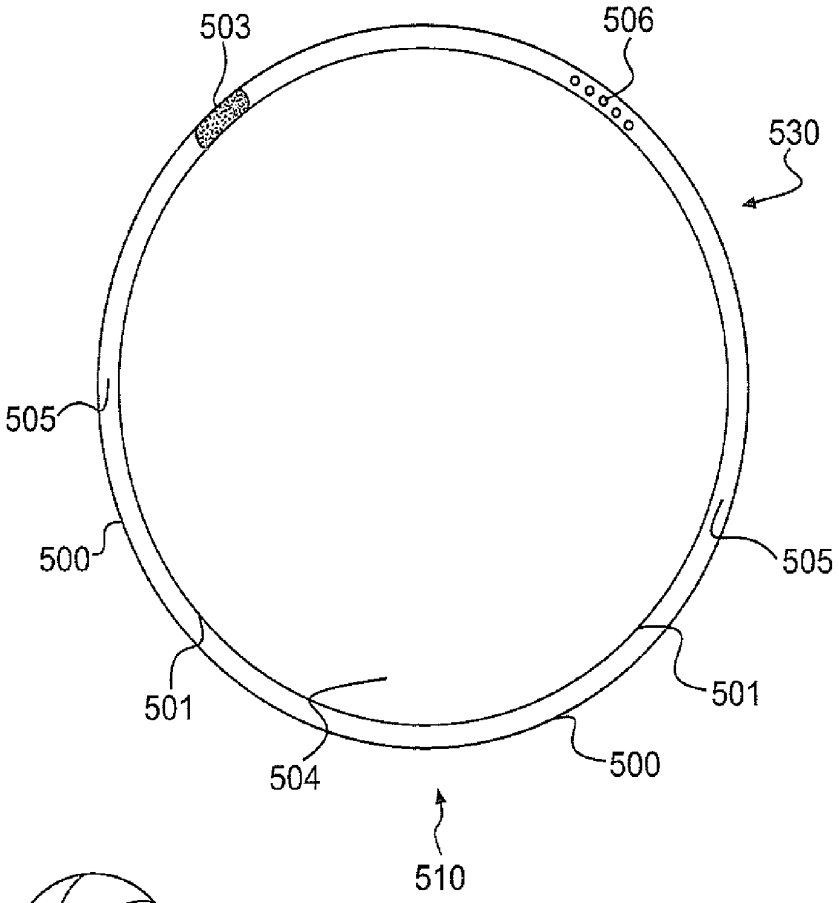

FIG. 27A

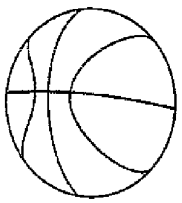

FIG. 27B
PRIOR ART

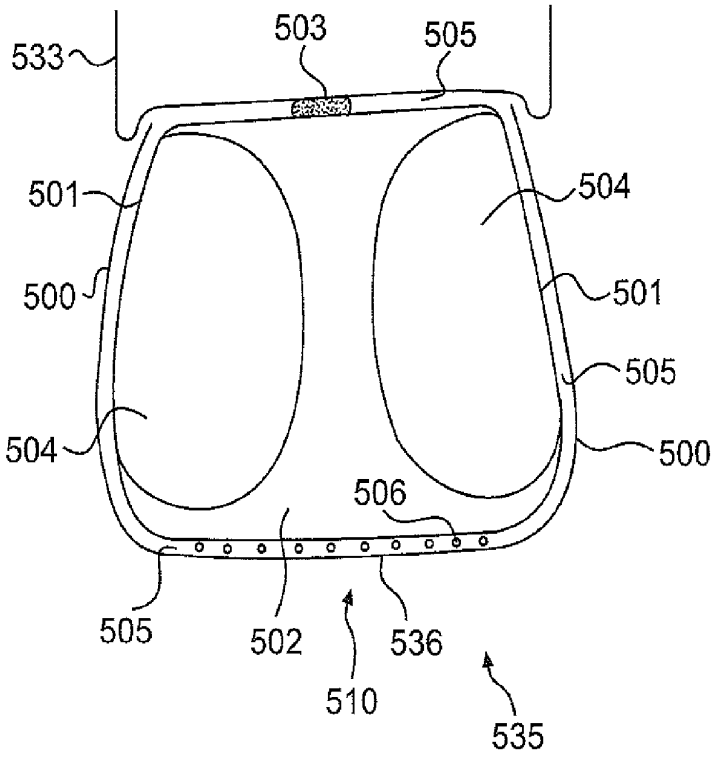

FIG. 28A

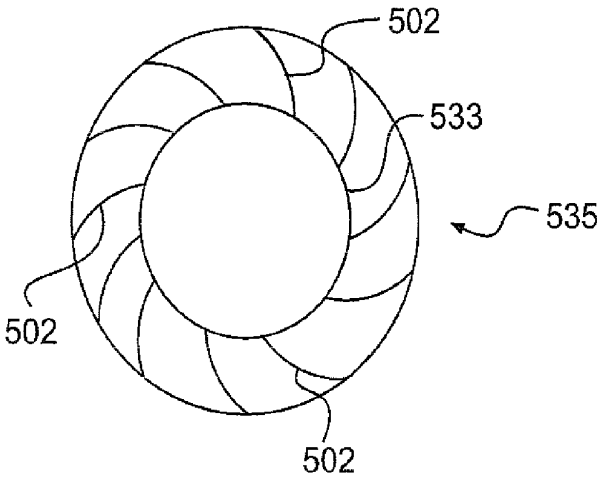

FIG. 28B

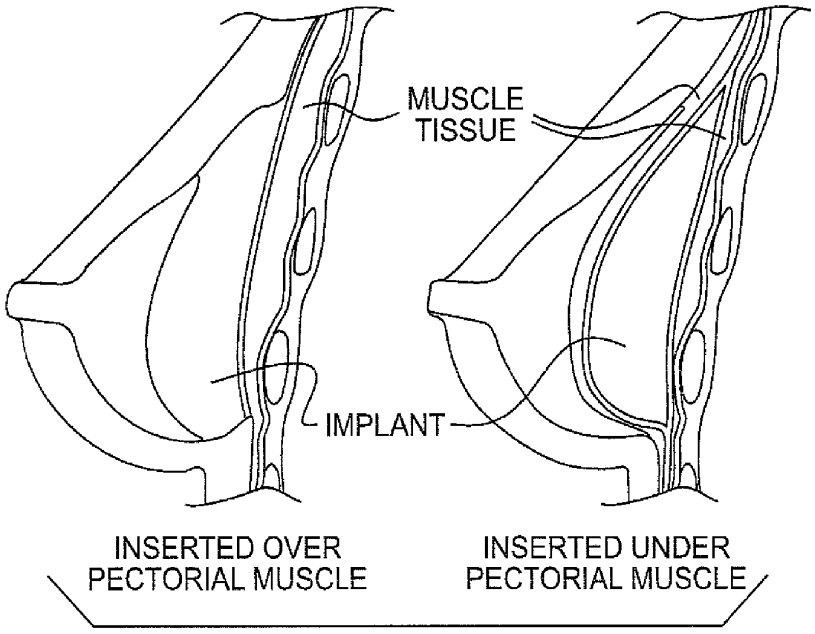

FIG. 29A
PRIOR ART

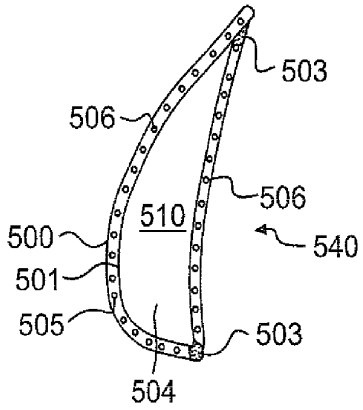

FIG. 29B

FIG. 30A

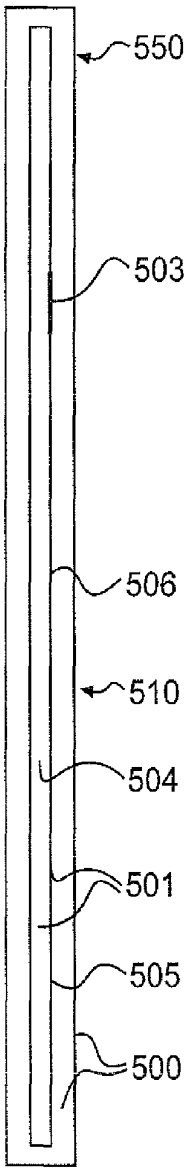

FIG. 30B

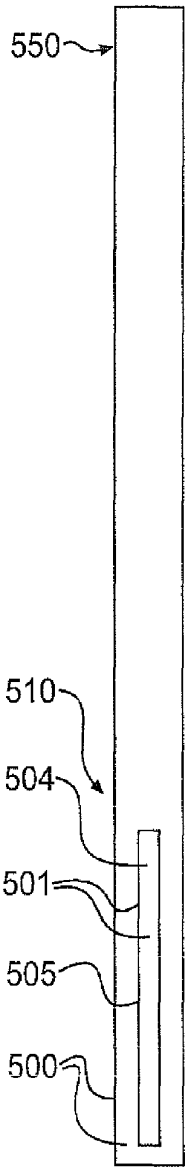

FIG. 30C

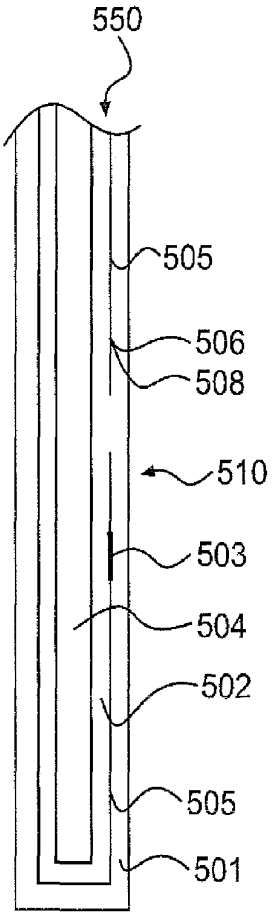

FIG. 30E

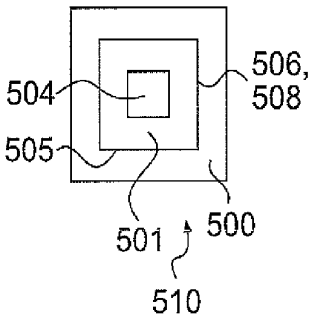

FIG. 30F

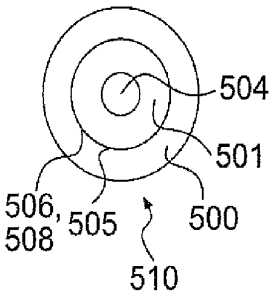

FIG. 30D

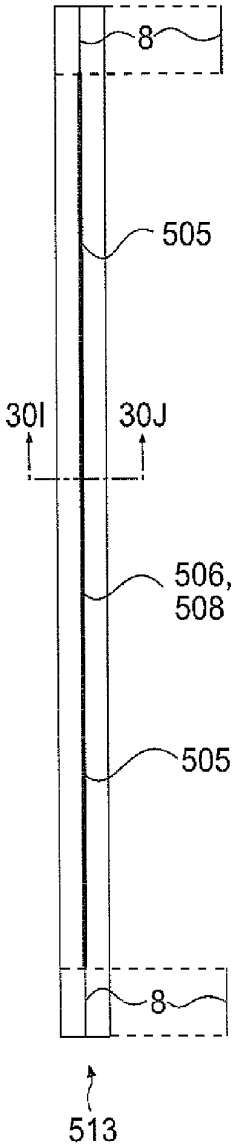

FIG. 30G

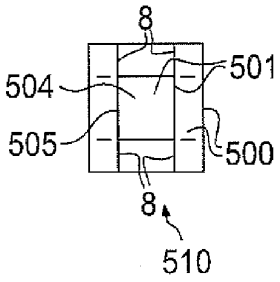

FIG. 30H

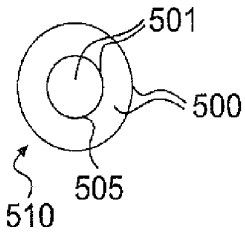

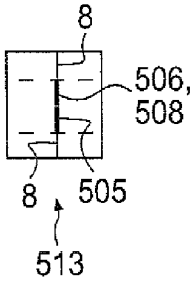

FIG. 30I

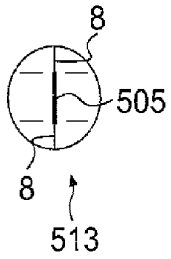

FIG. 30J

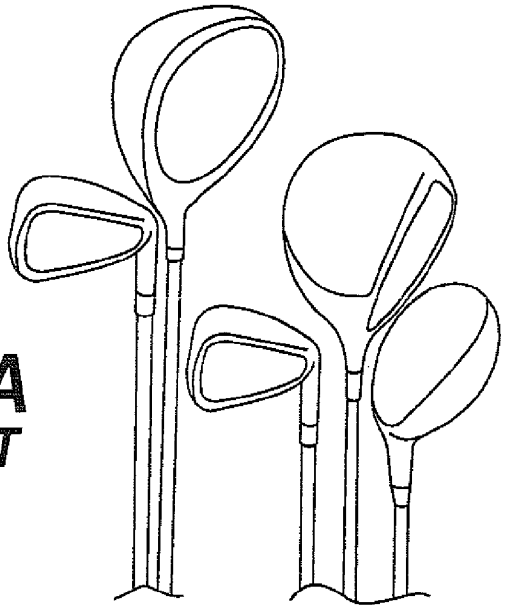

FIG. 31A
PRIOR ART

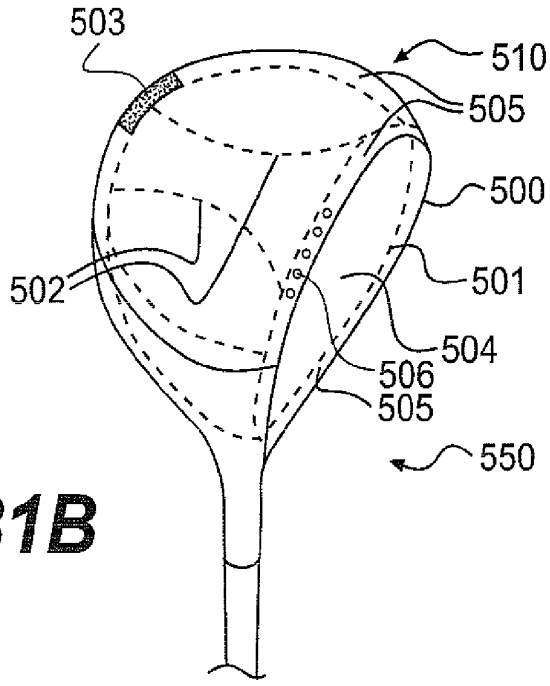

FIG. 31B

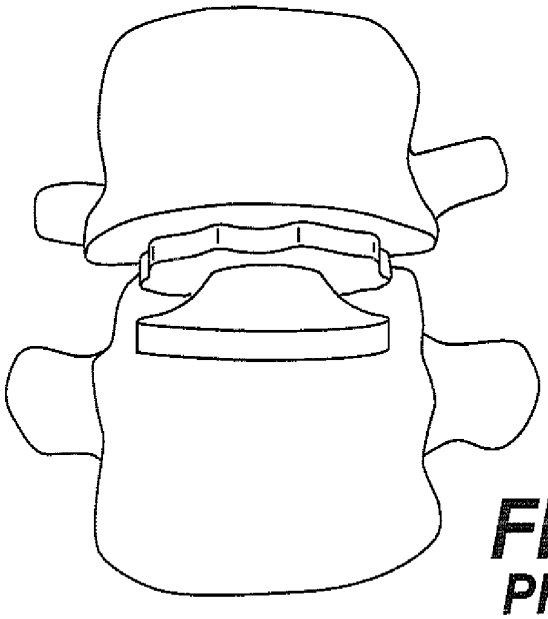

FIG. 32A
PRIOR ART

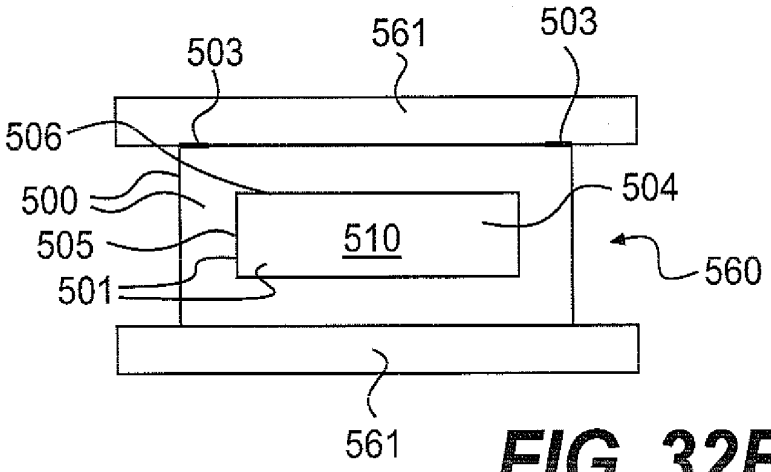

FIG. 32B

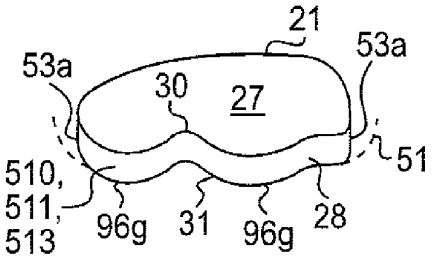

FIG. 33A

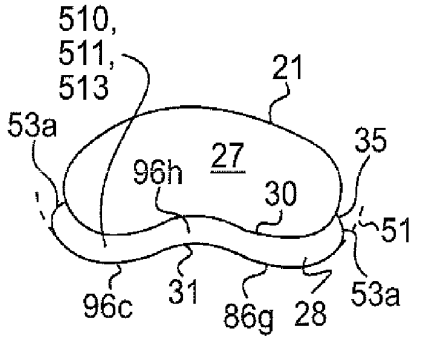

FIG. 33B

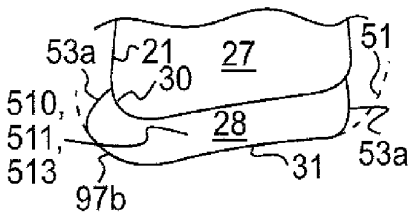

FIG. 33C

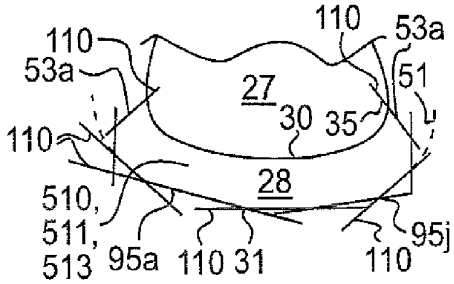

FIG. 33D

FIG. 33E

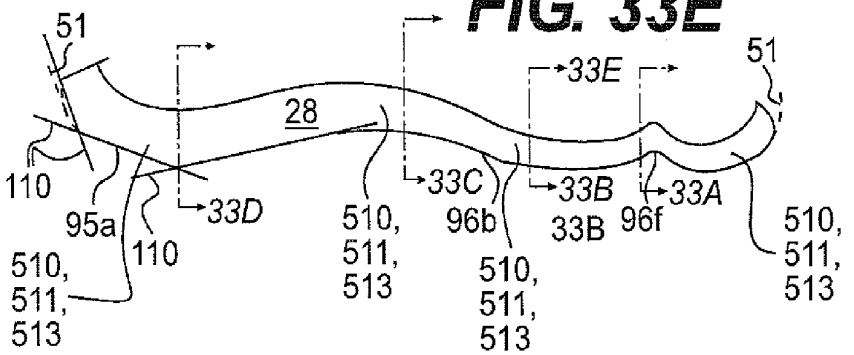

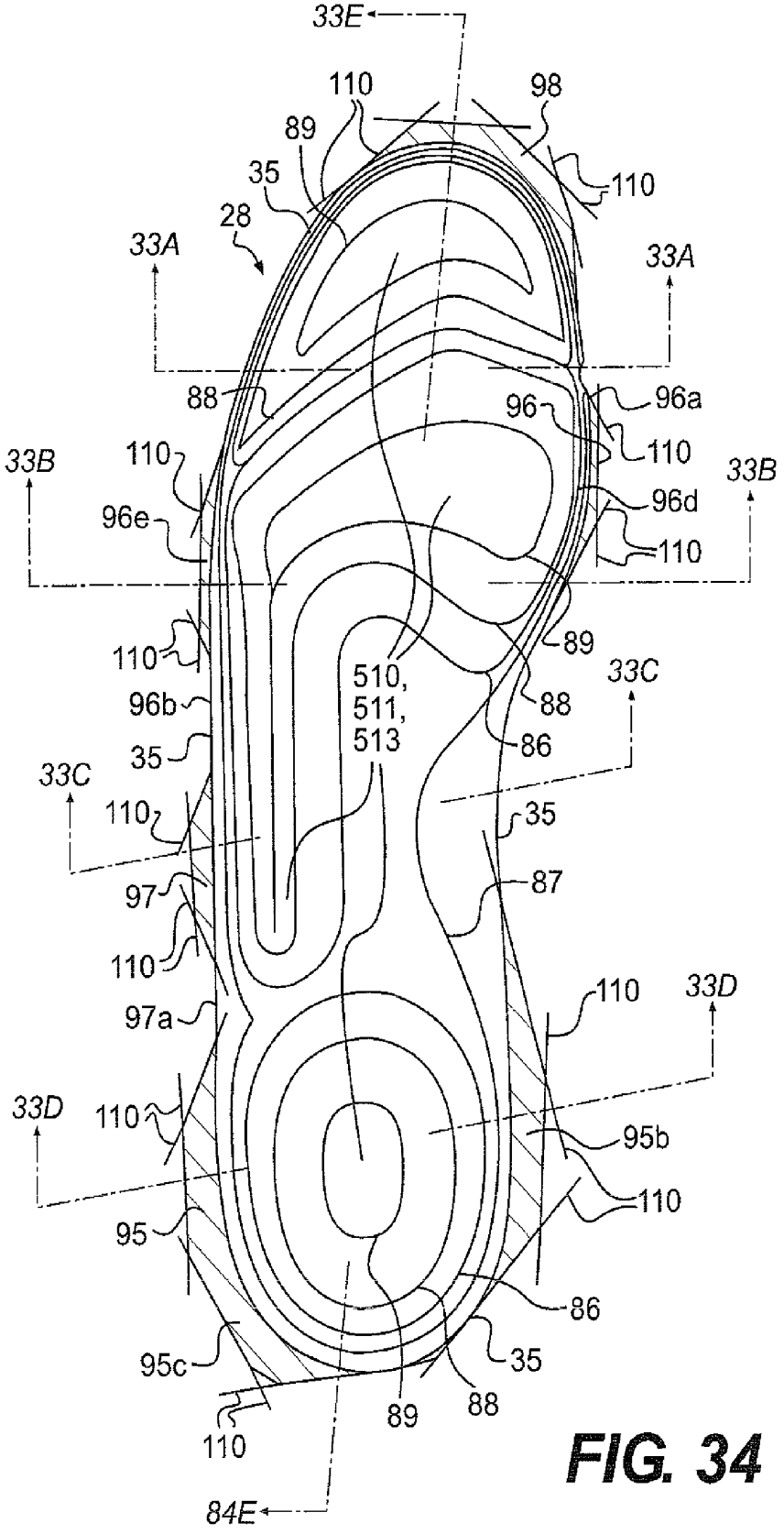
33E
110
98
89
35
110
28
33A
33A
88
96
96a
110
33B
110
33B
96e
96d
110
110
89
510,
511,
513
33C
96b
88
86
35
33C
110
35
97
87
110
110
33D
97a
33D
110
95b
110
95
86
95c
35
89
88
110
84E

FIG. 34

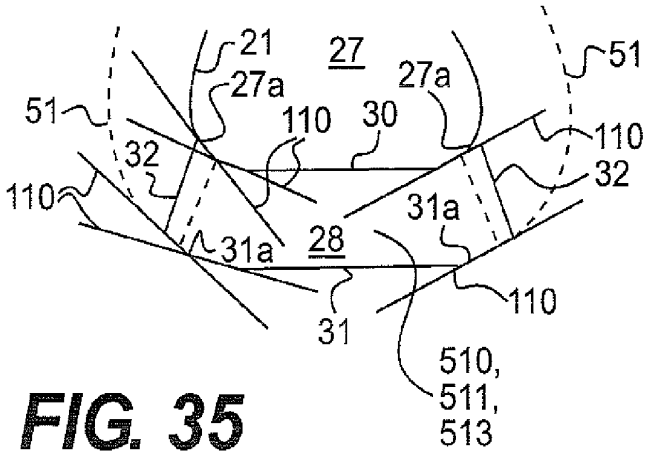

FIG. 35

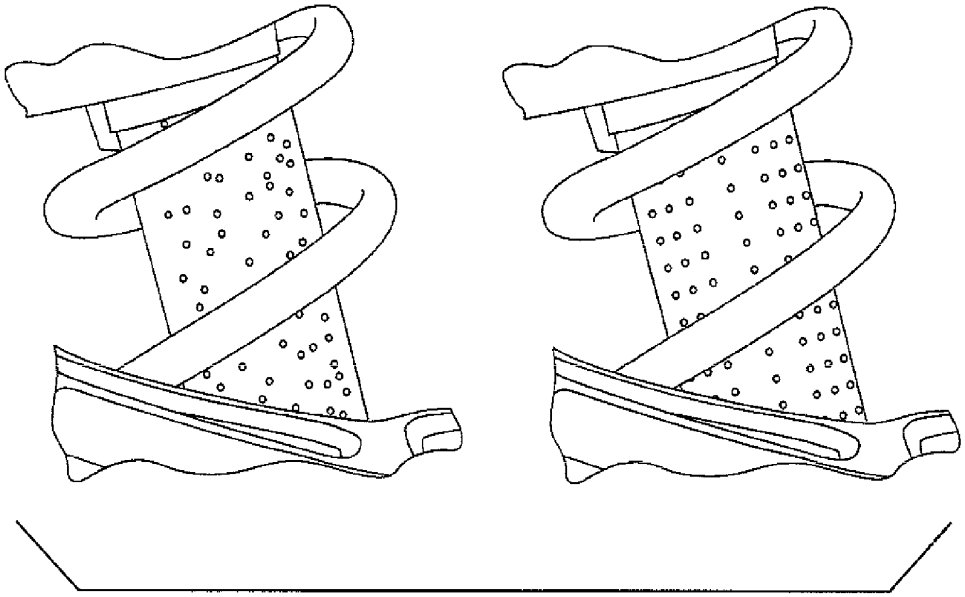

FIG. 36
PRIOR ART

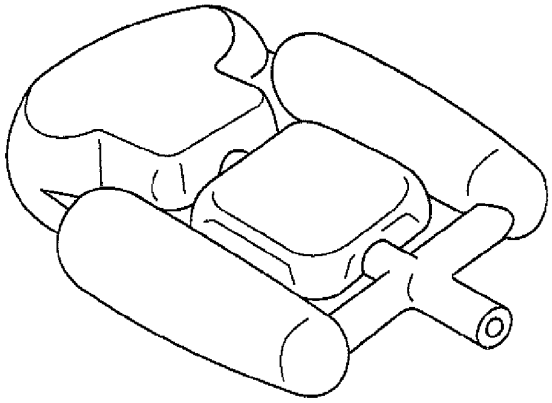

FIG. 37
PRIOR ART

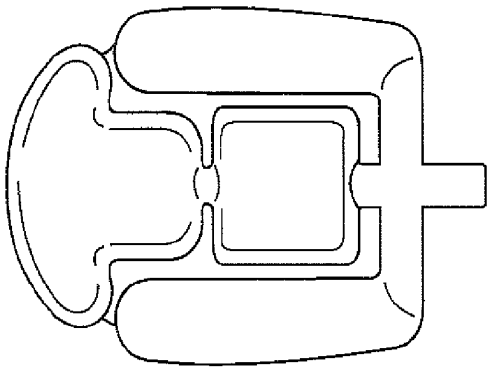

FIG. 38
PRIOR ART

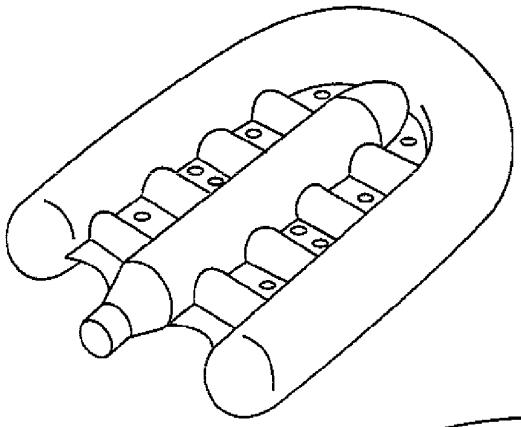

FIG. 39
PRIOR ART

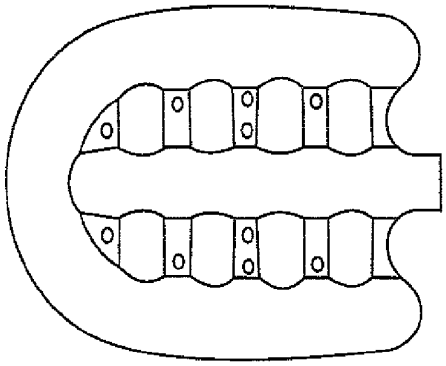

FIG. 40
PRIOR ART

FIG. 41
PRIOR ART

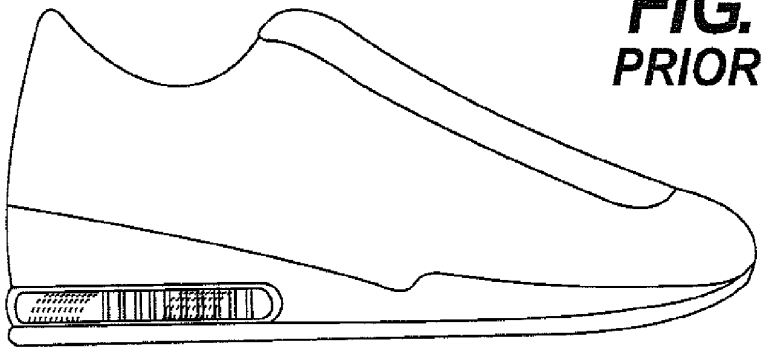

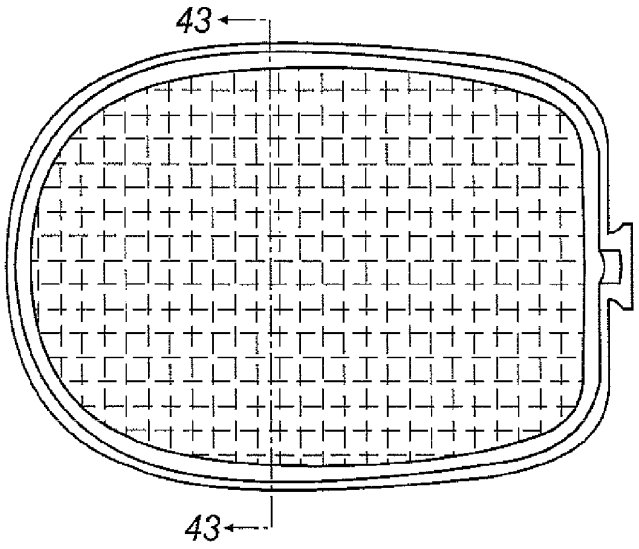

FIG. 42
PRIOR ART

FIG. 43
PRIOR ART

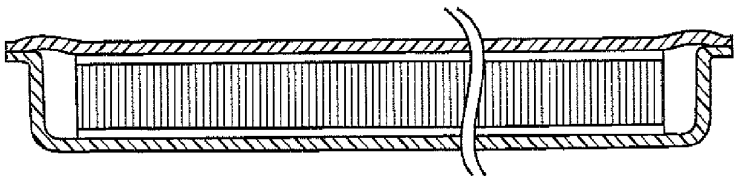

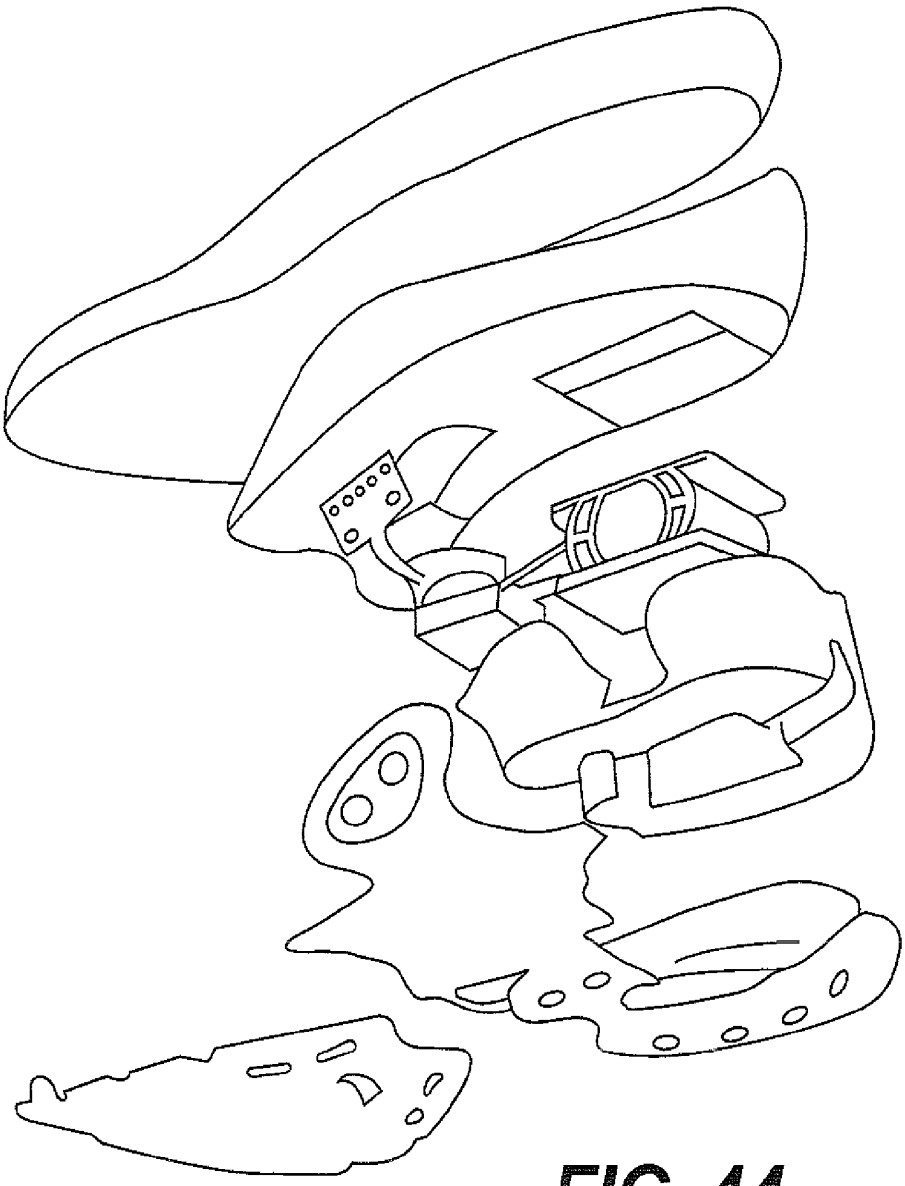

FIG. 44
PRIOR ART

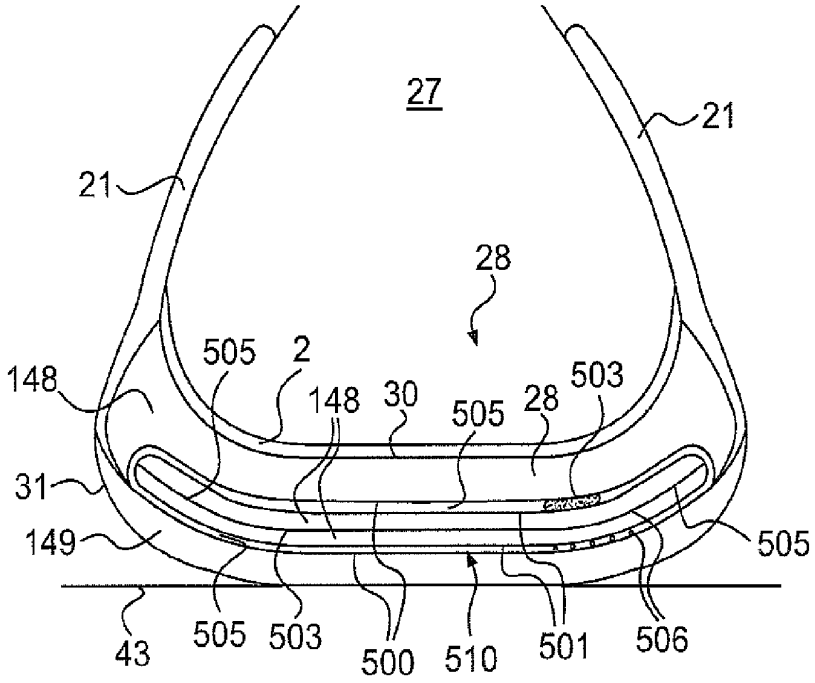
27
21
21
28
505
2
148
148
30
505
28
503
31
149
505
43
505
503
500
510
501
506

FIG. 45

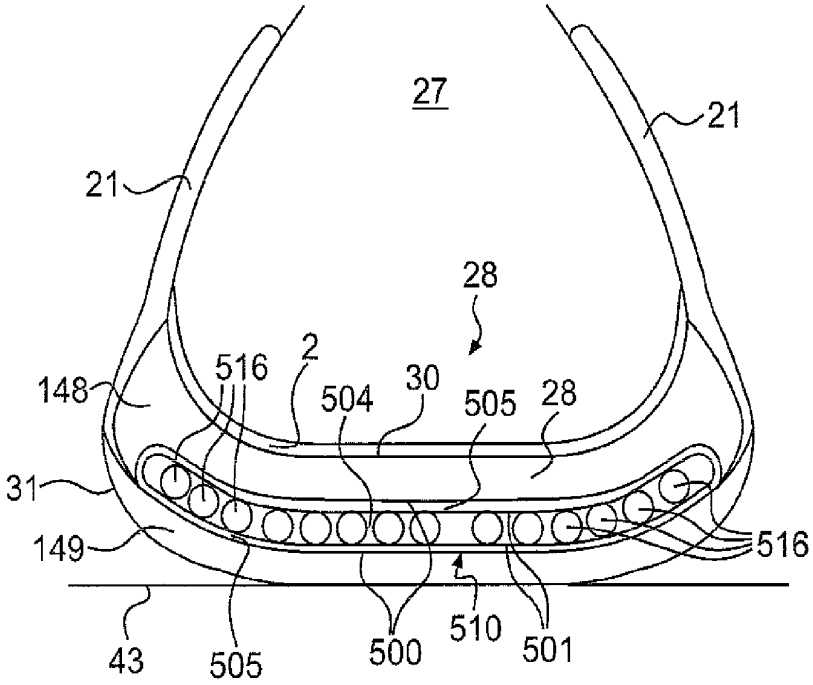
27
21
21
28
516
2
148
504
30
505
28
31
149
516
43
505
500
510
501

FIG. 46

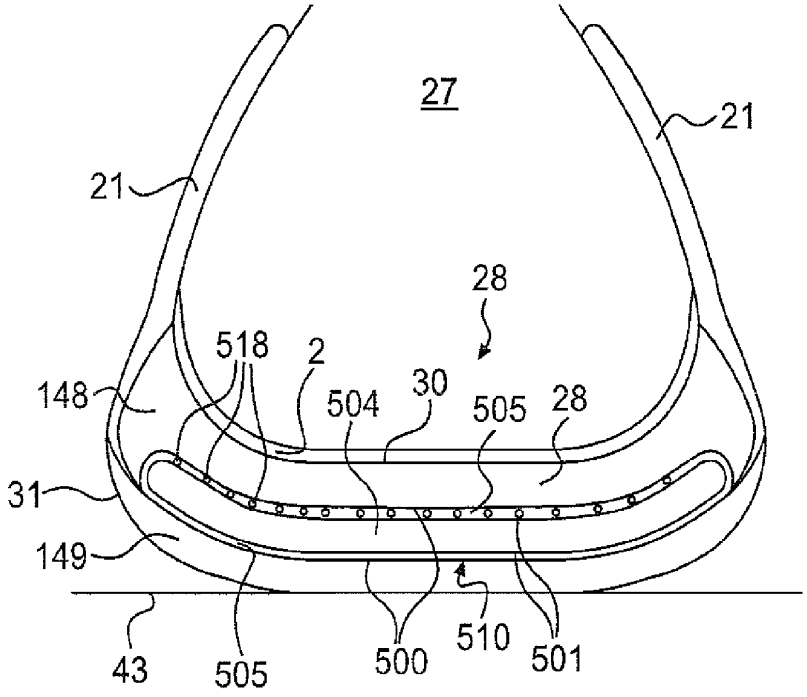

FIG. 47

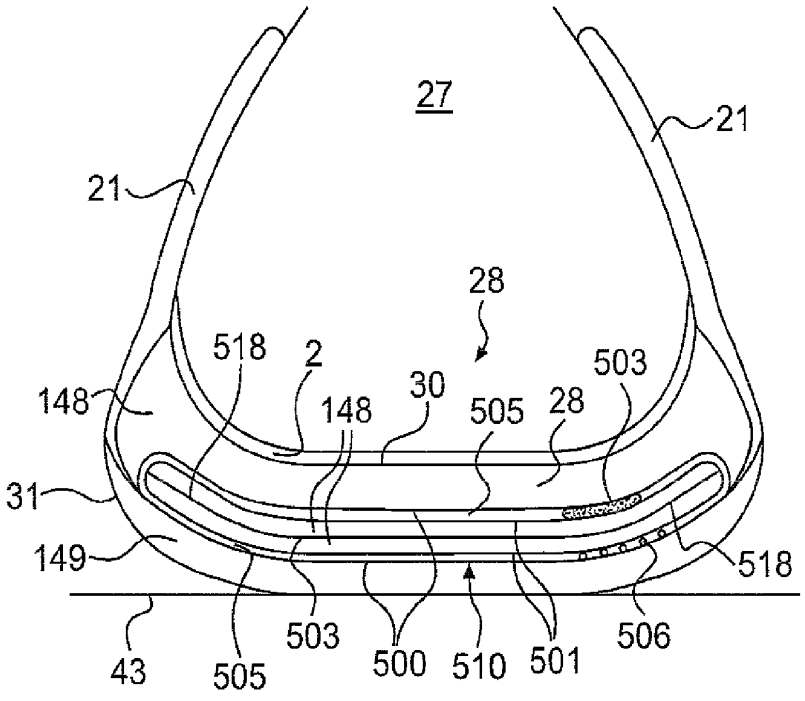

FIG. 48A

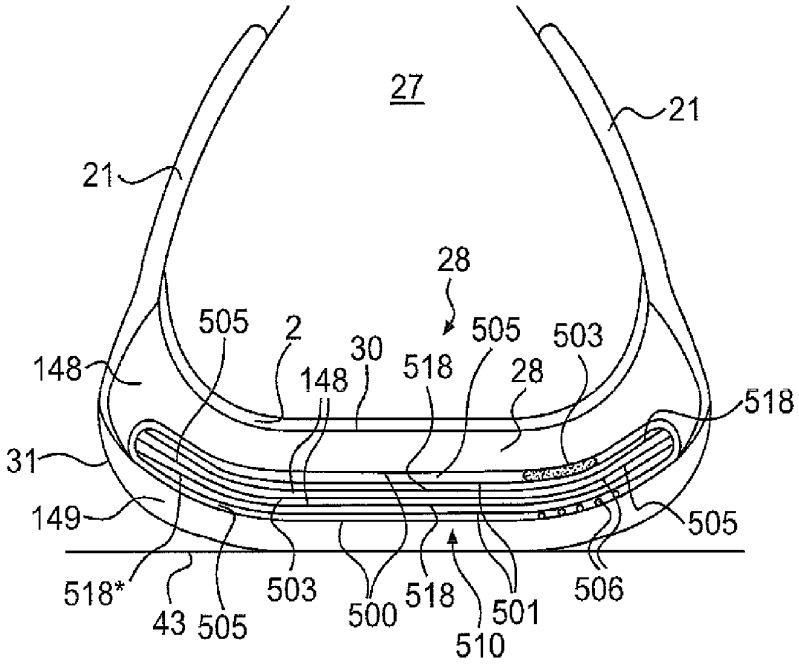

FIG. 48B

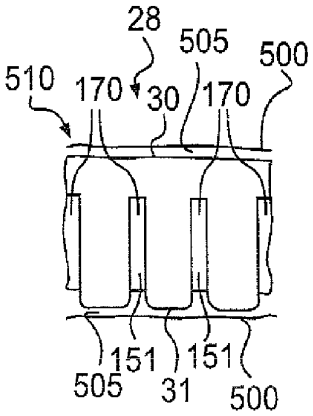

FIG. 48C

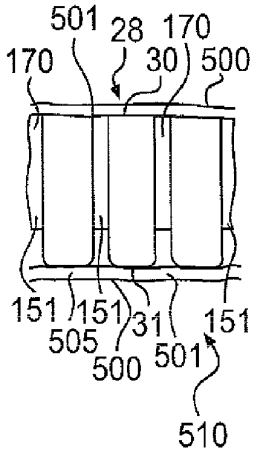

FIG. 48D

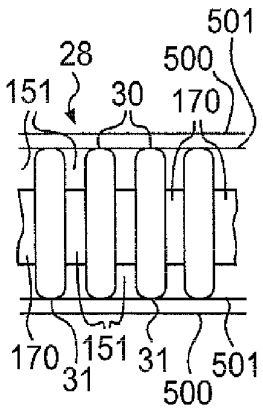

FIG. 48E

FIG. 49

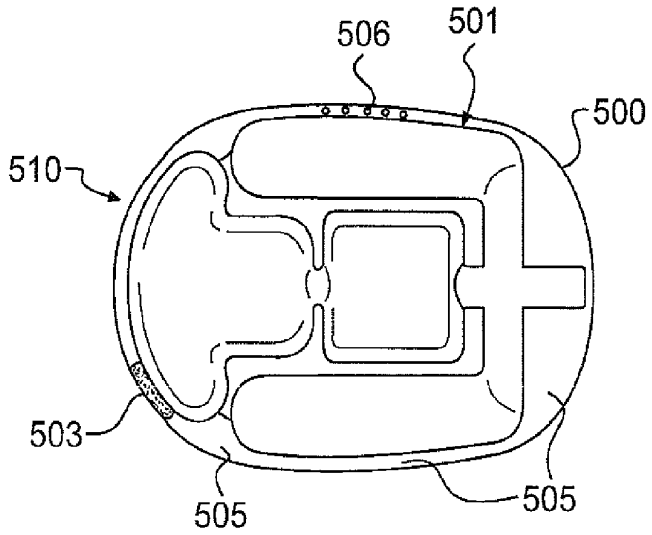

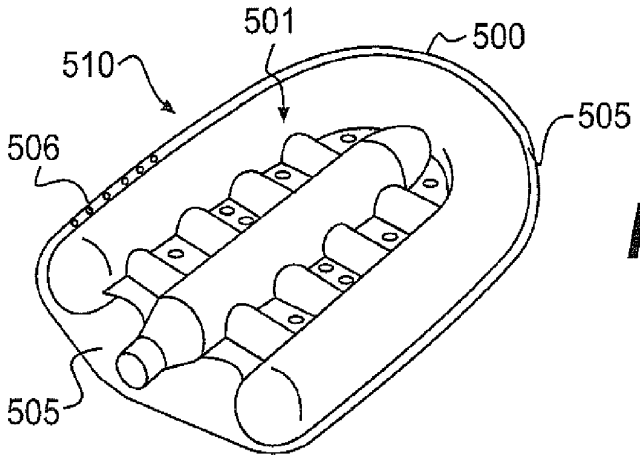

FIG. 50

FIG. 51A

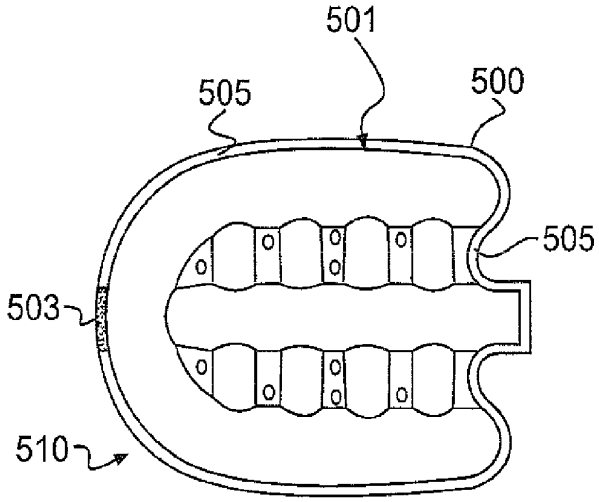

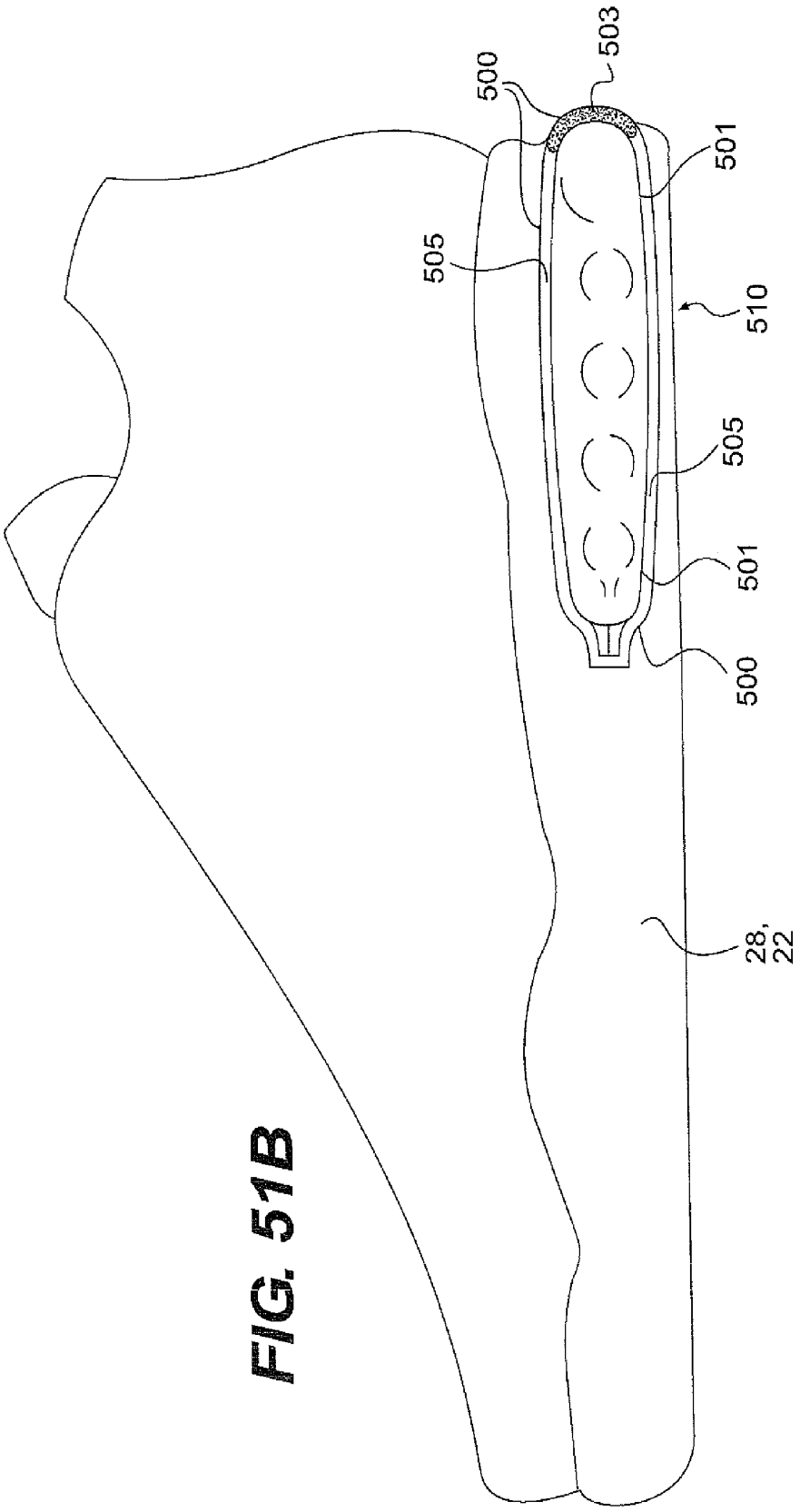

FIG. 51B

FIG. 52A

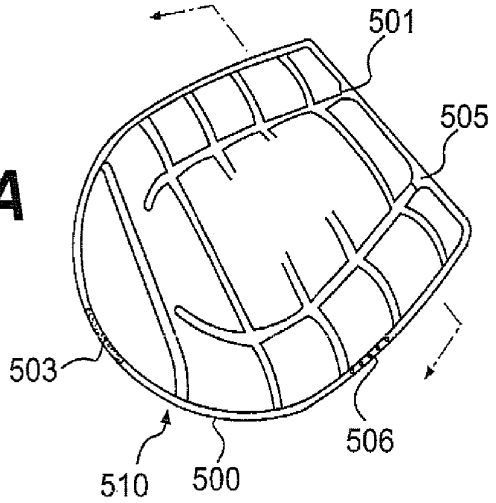

FIG. 52B

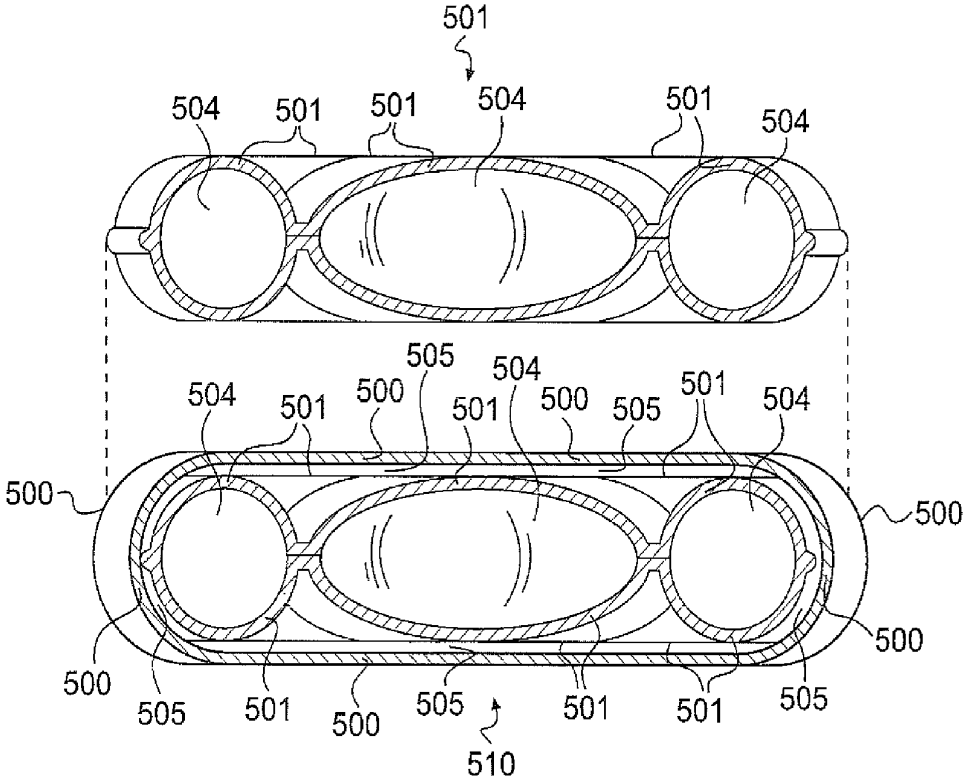

FIG. 52C

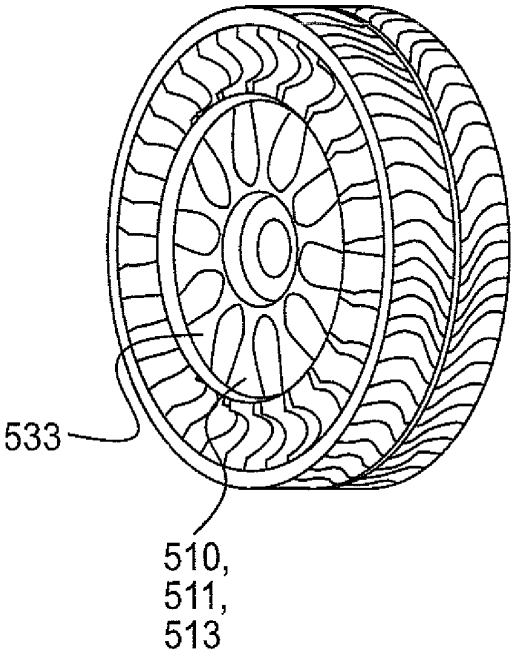

FIG. 53

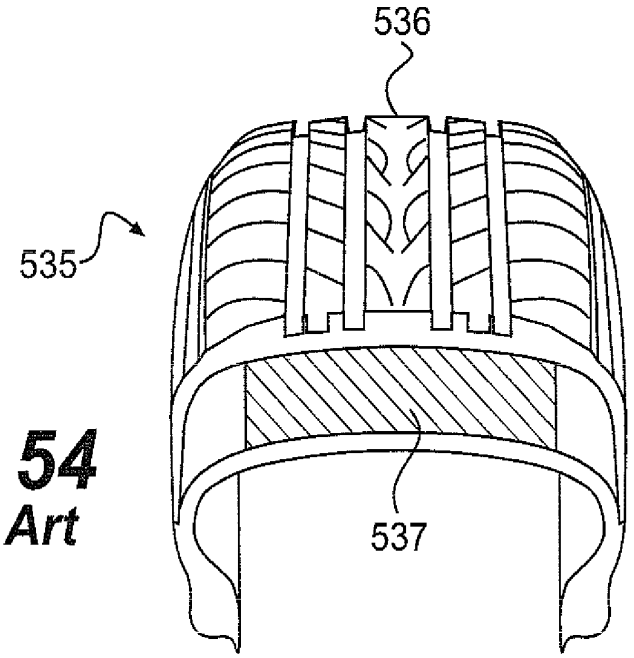

FIG. 54
Prior Art

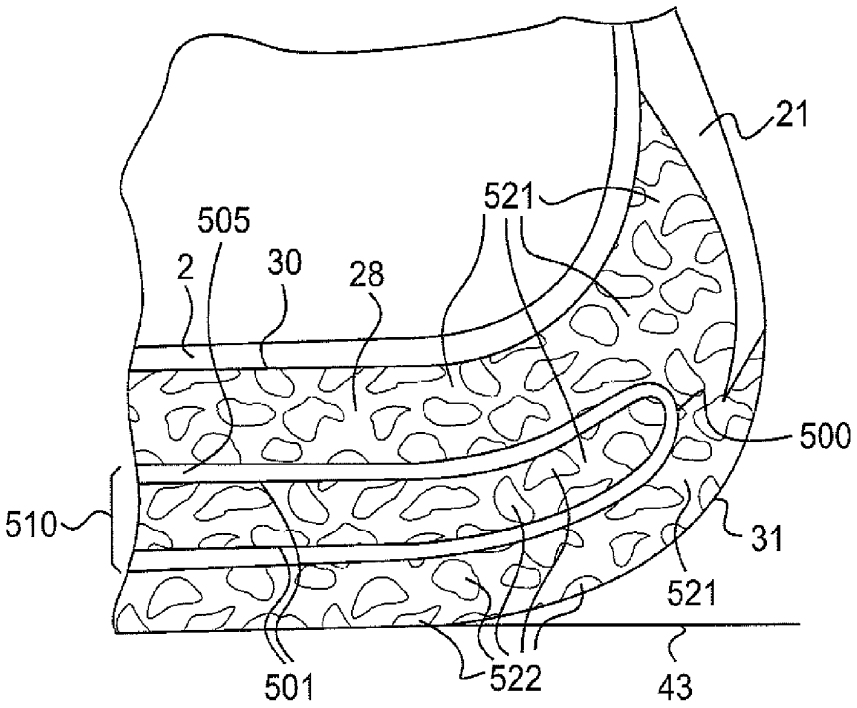
21
505
521
2
30
28
500
510
31
521
501
522
43

FIG. 55

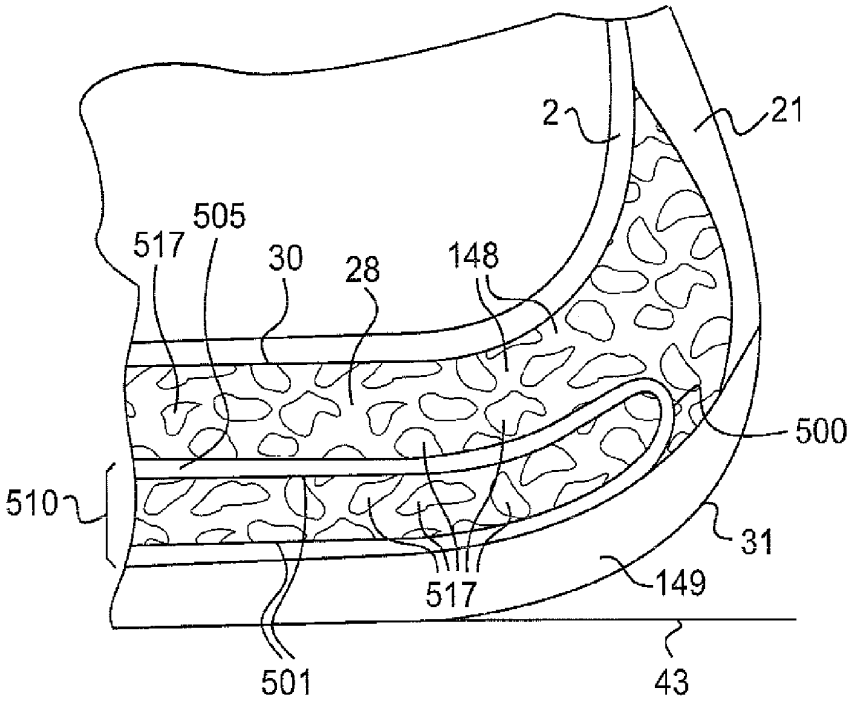
2
21
505
517
30
28
148
500
510
31
517
149
501
43

FIG. 56

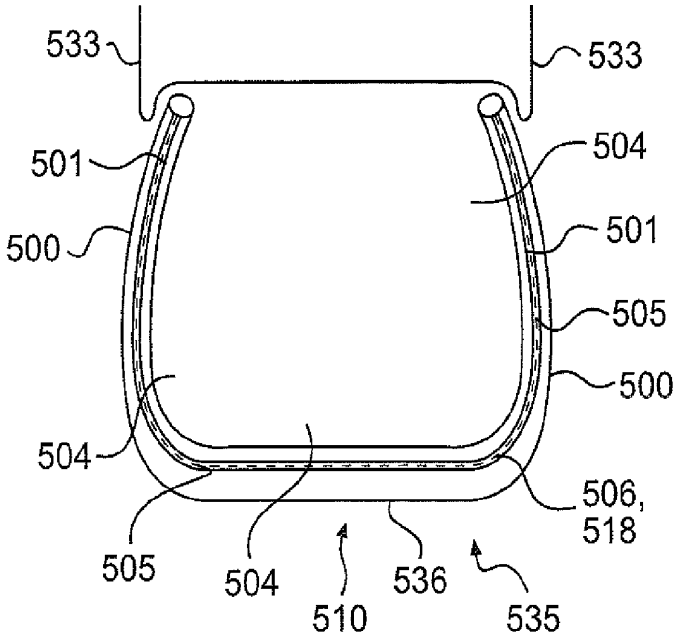
533
533
501
504
500
501
505
500
504
506,
518
505
504
510
536
535

FIG. 57

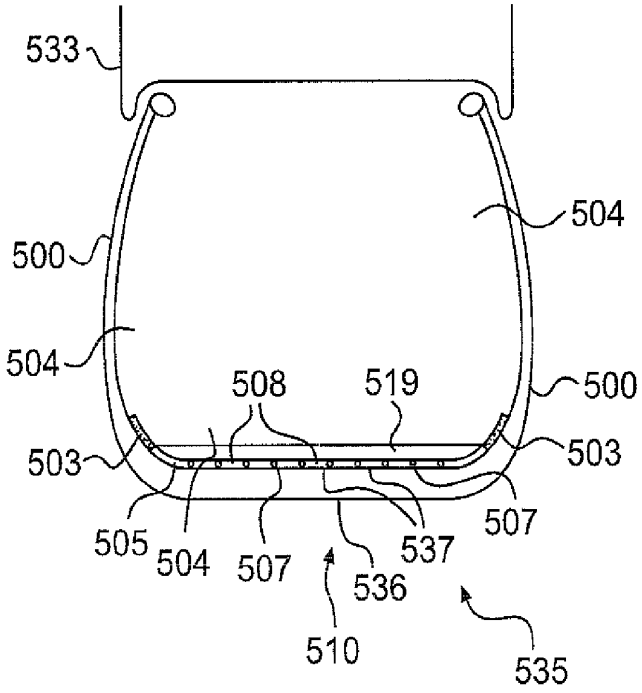
533
504
500
504
508
519
500
503
503
505
504
507
537
507
536
510
535

FIG. 58

FIG. 59

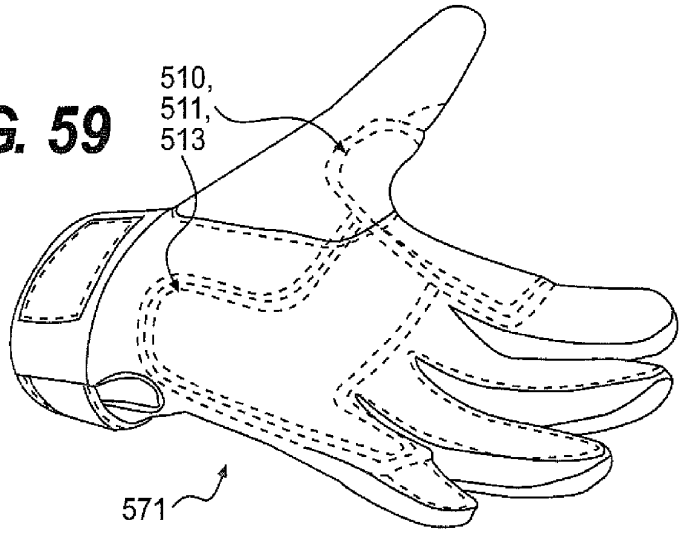

FIG. 60C

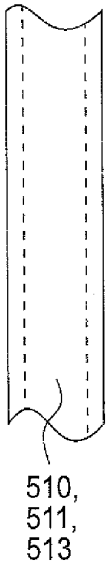

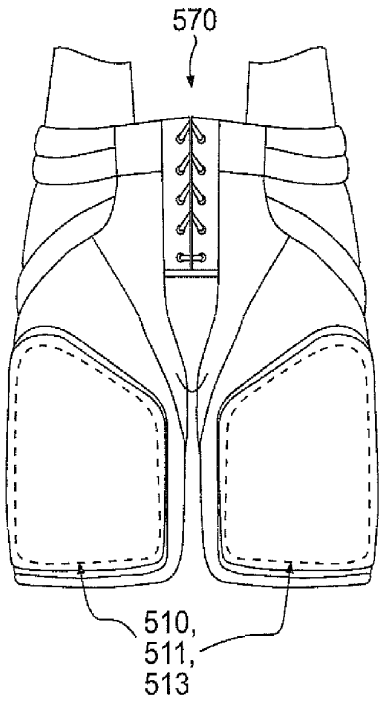

FIG. 60B

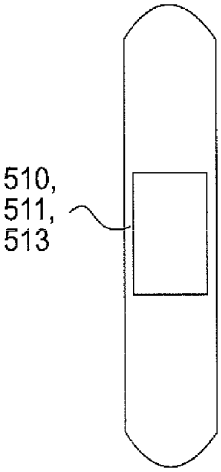

FIG. 60A

FIG. 61A

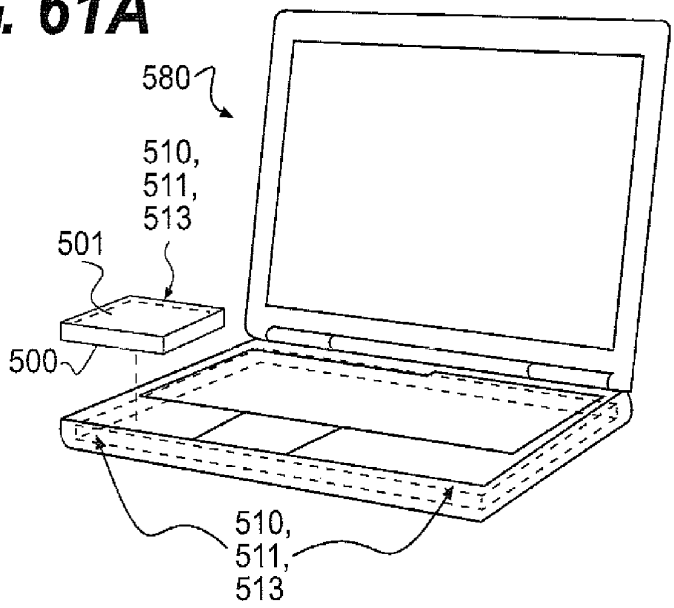

FIG. 61B

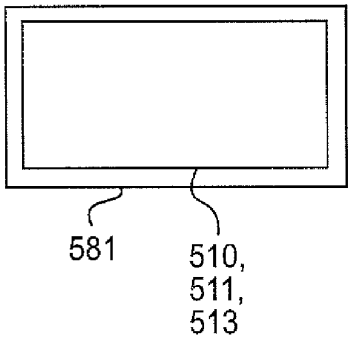

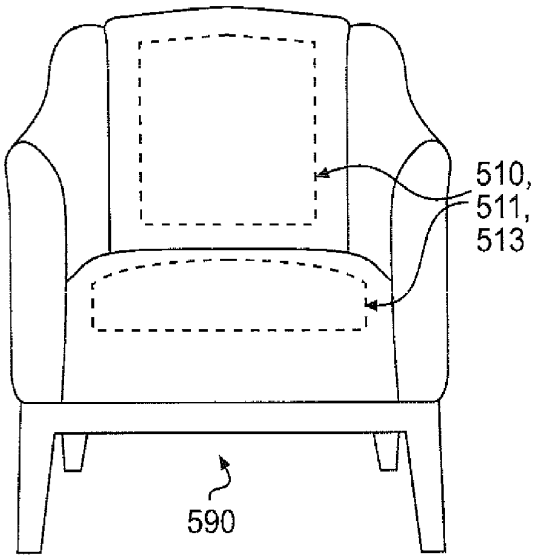

FIG. 62

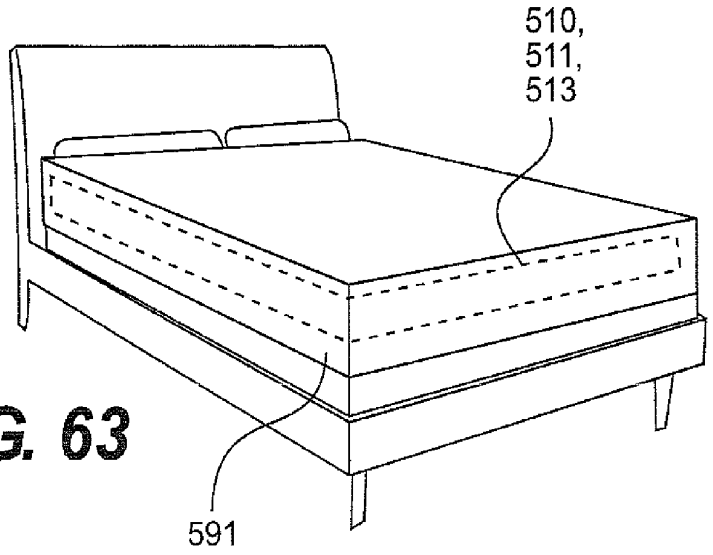

FIG. 63

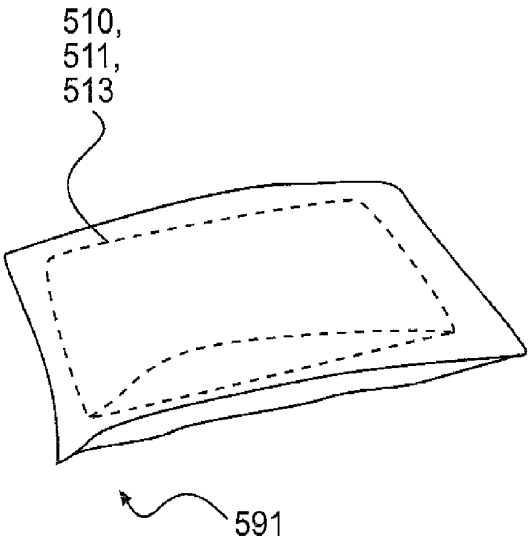

FIG. 64

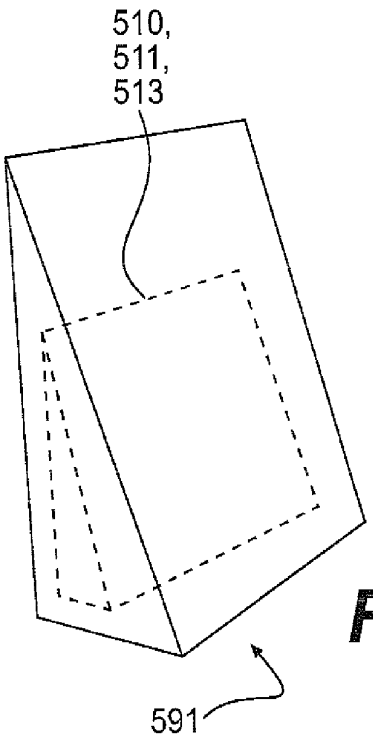

FIG. 65

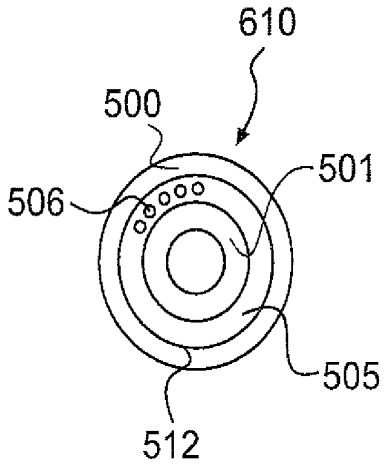

FIG. 66

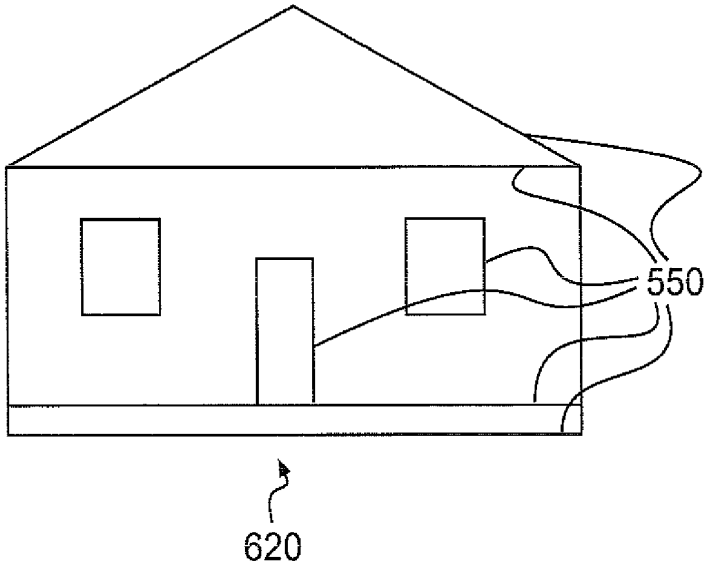

FIG. 68

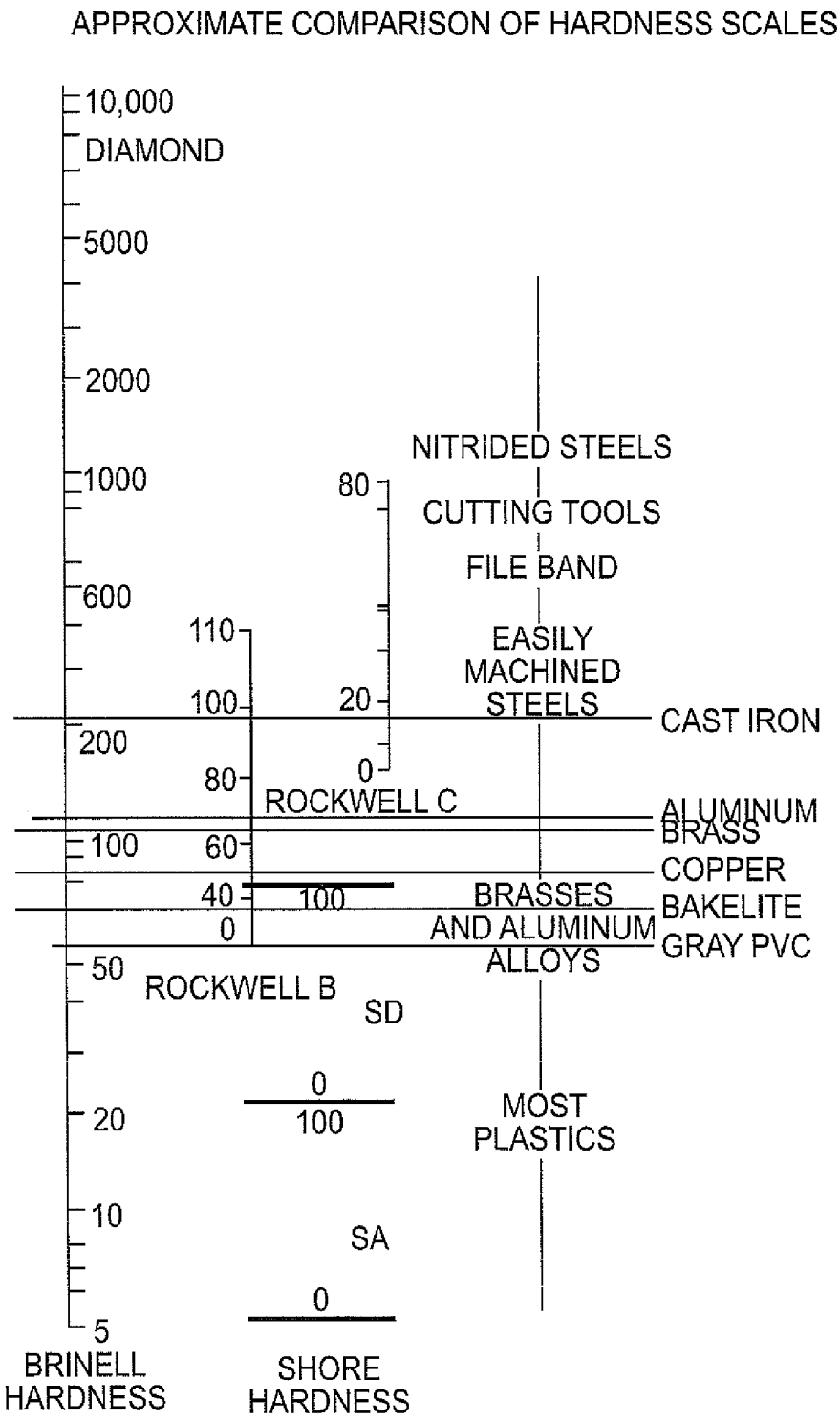
APPROXIMATE COMPARISON OF HARDNESS SCALES
10,000
DIAMOND
5000
2000
1000
600
200
100
50
20
10
5
BRINELL HARDNESS
110
100
80
60
40
0
ROCKWELL C
ROCKWELL B
80
20
0
SD
0
100
SA
0
SHORE HARDNESS
NITRIDED STEELS
CUTTING TOOLS
FILE BAND
EASILY MACHINED STEELS
CAST IRON
ALUMINUM
BRASS
COPPER
100
BRASSES AND ALUMINUM ALLOYS
BAKELITE
GRAY PVC
MOST PLASTICS

FIG. 67

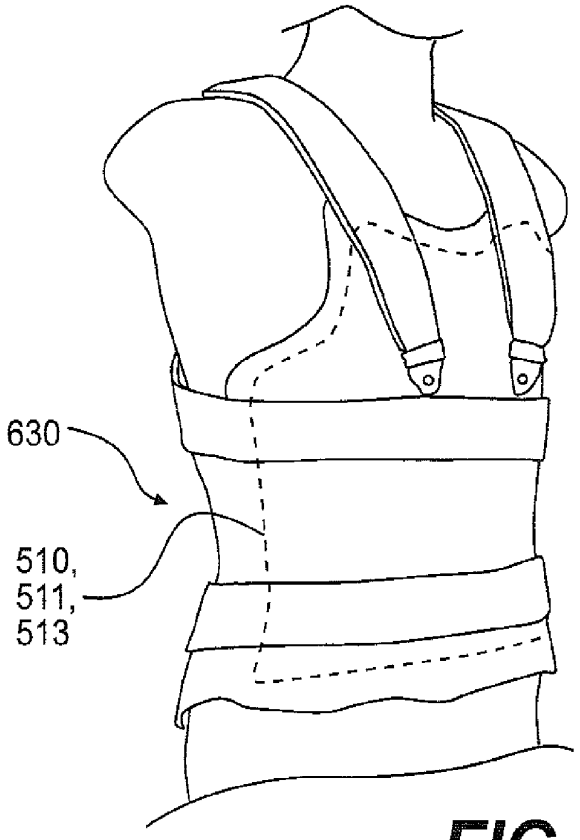

FIG. 69

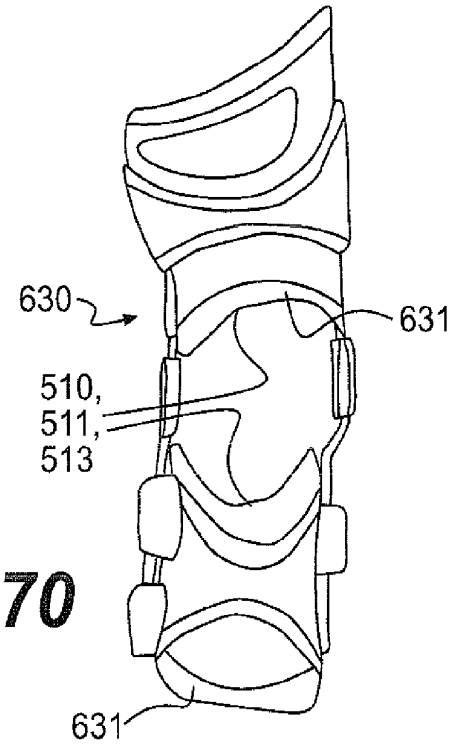

FIG. 70

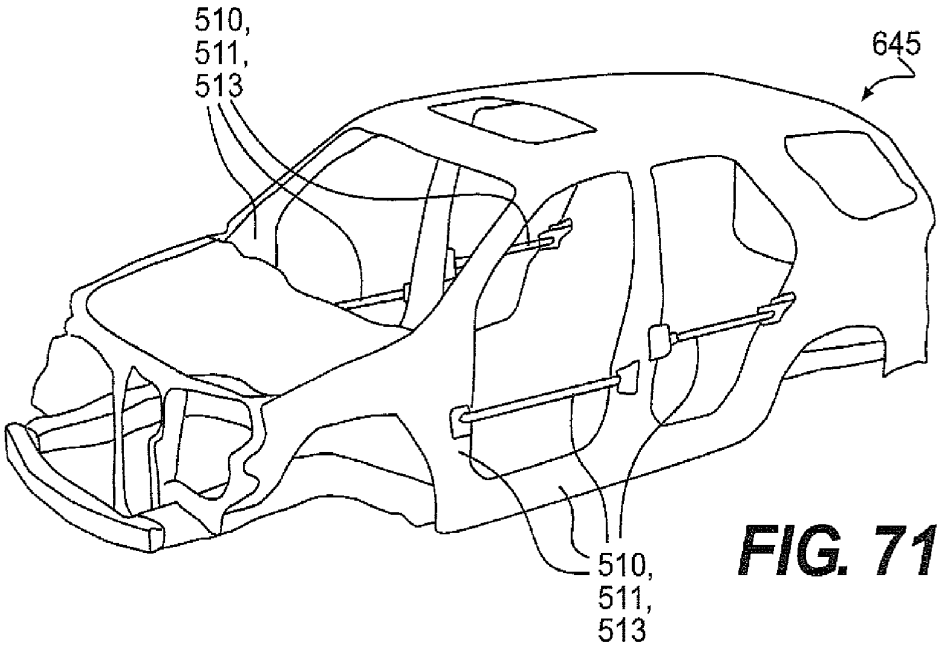

FIG. 71

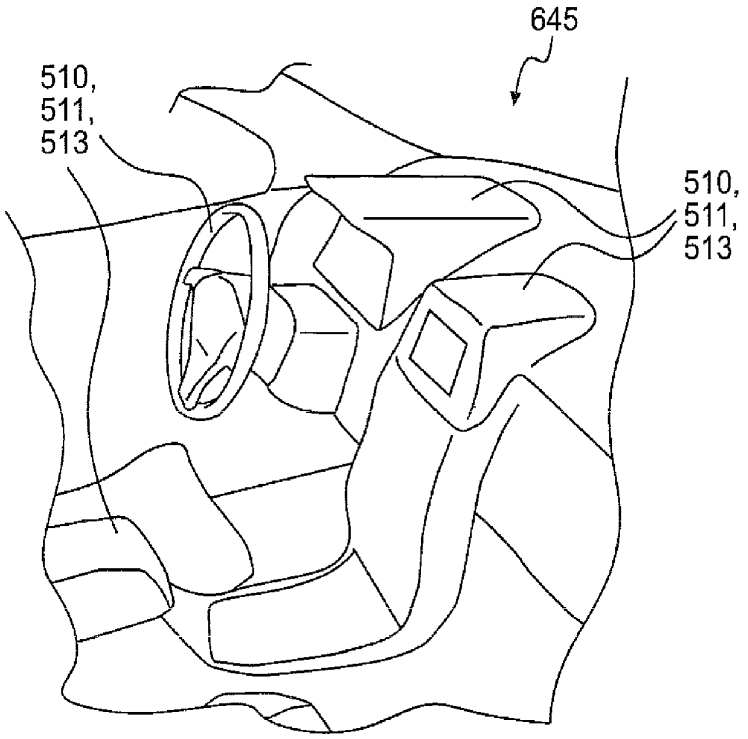

FIG. 72

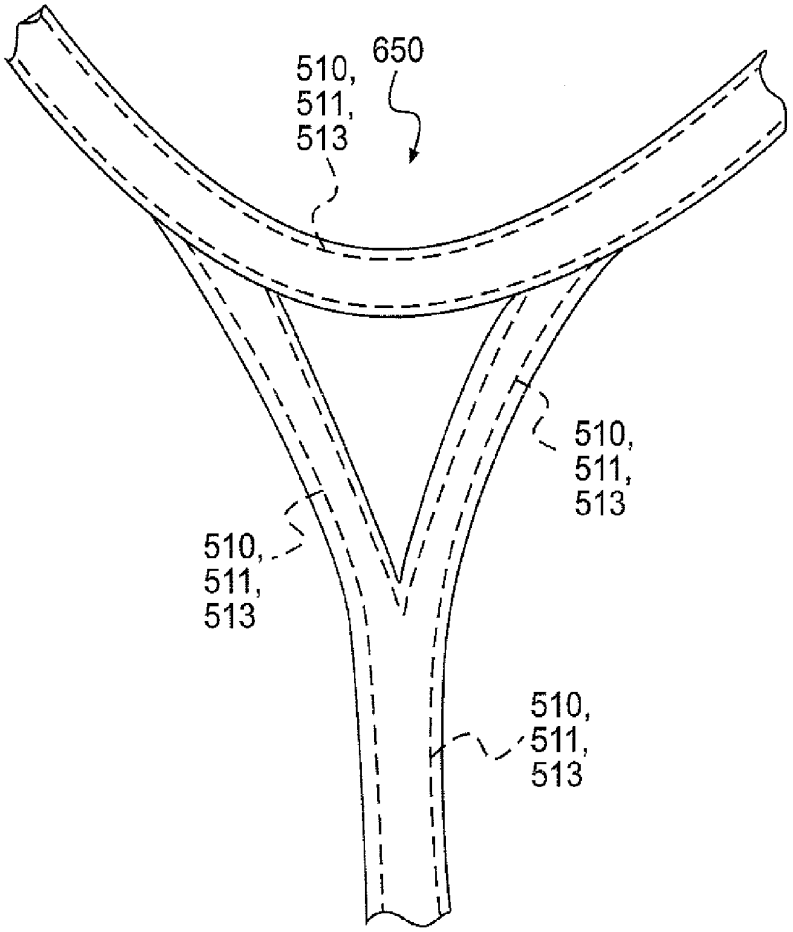

FIG. 73A

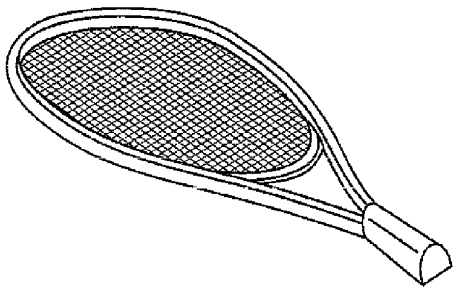

FIG. 73B
PRIOR ART

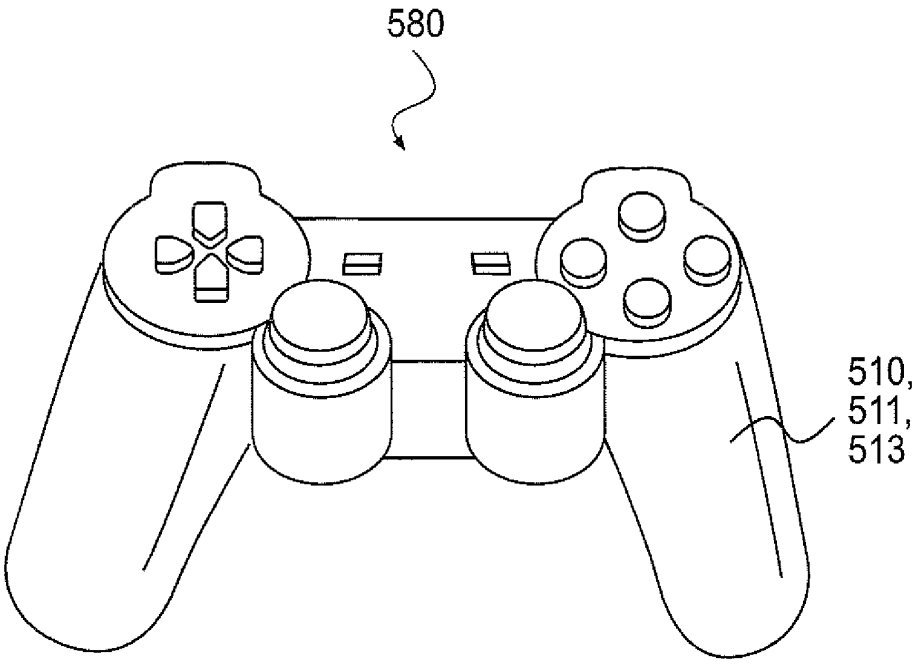

FIG. 74

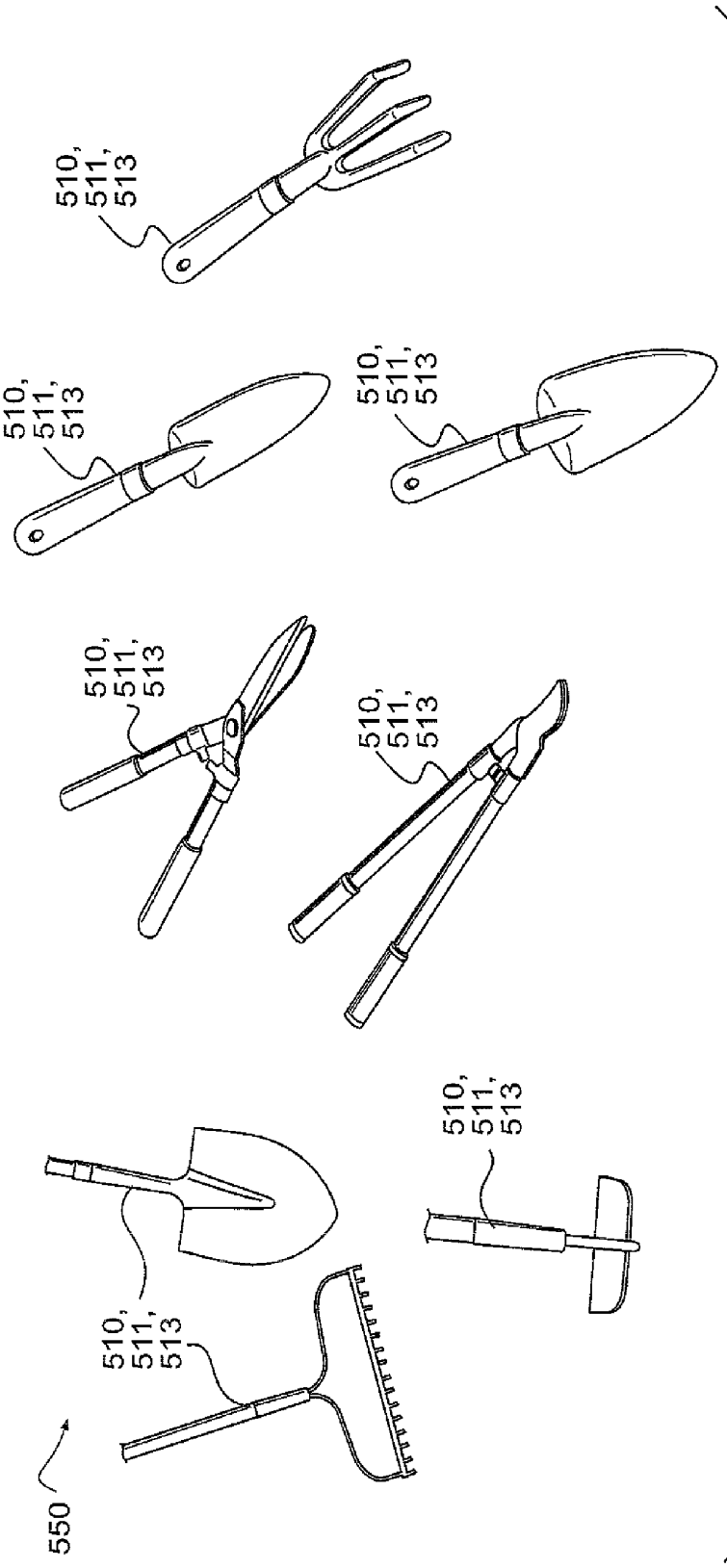
510, 511, 513
510, 511, 513
510, 511, 513
510, 511, 513
510, 511, 513
510, 511, 513
510, 511, 513
550

FIG. 75

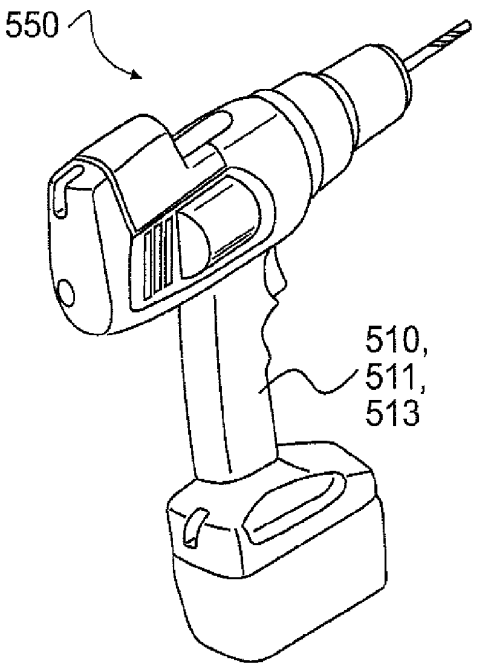

FIG. 76

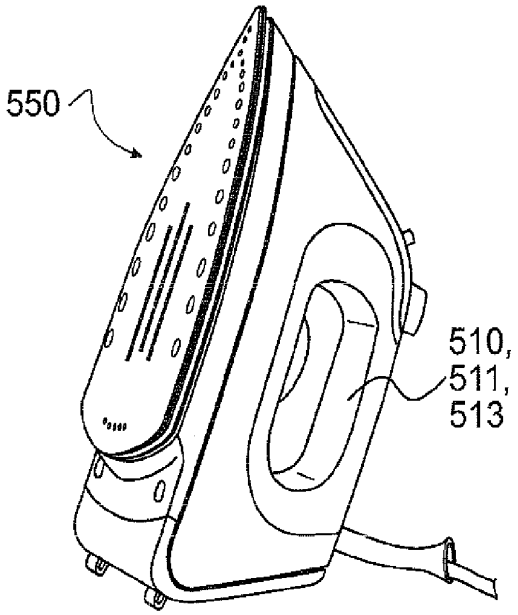

FIG. 77

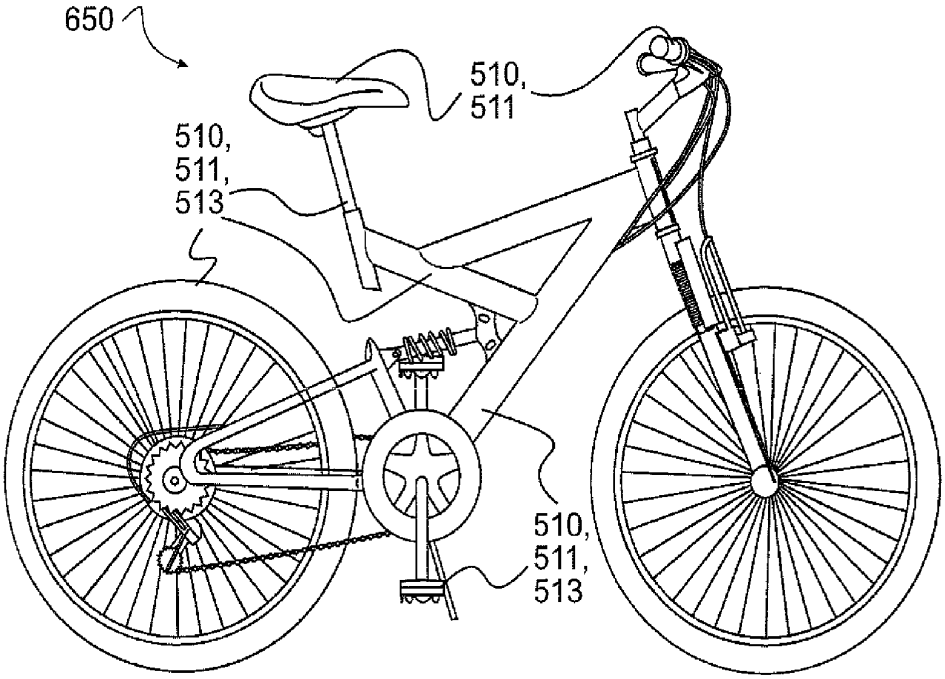

FIG. 78

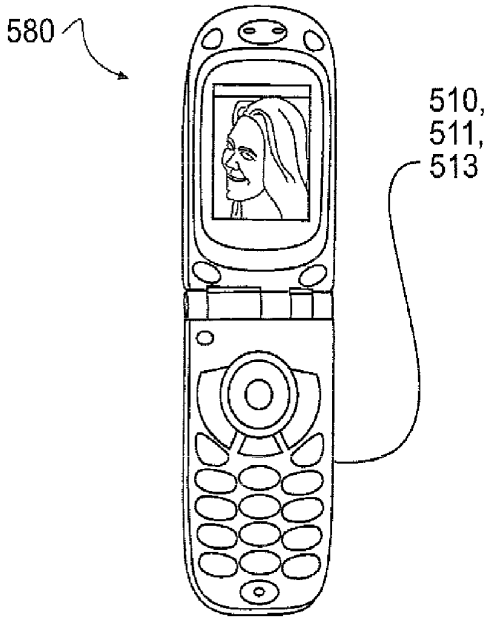

FIG. 79

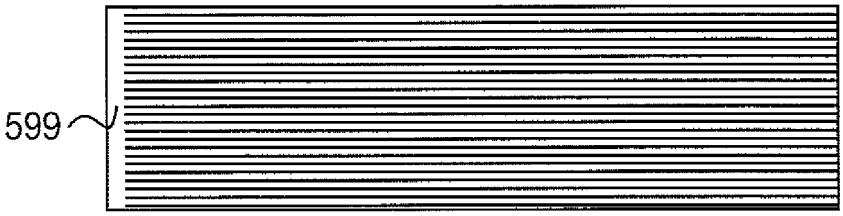

FIG. 80A

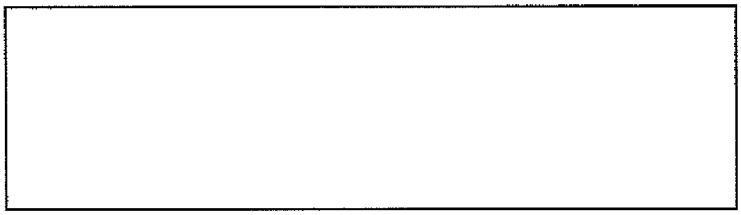

FIG. 80B

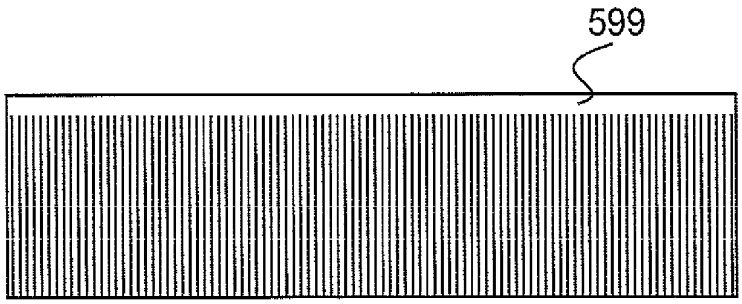

FIG. 80C

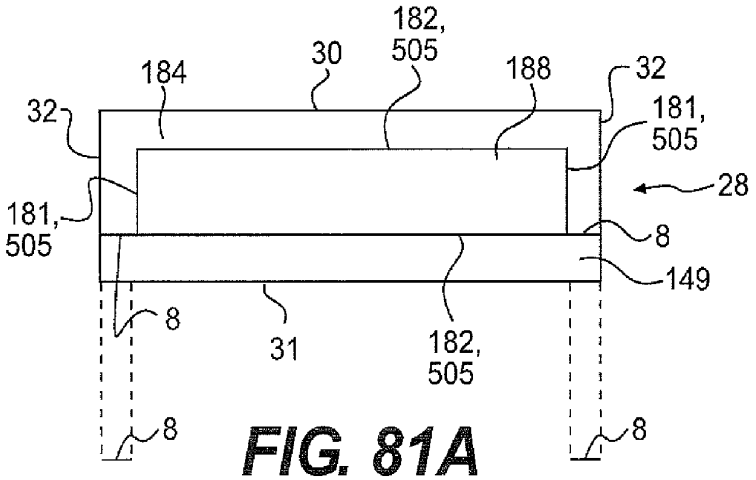

FIG. 81A

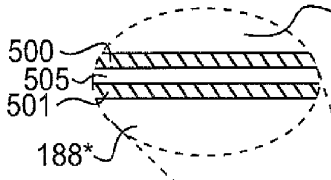

FIG. 81B

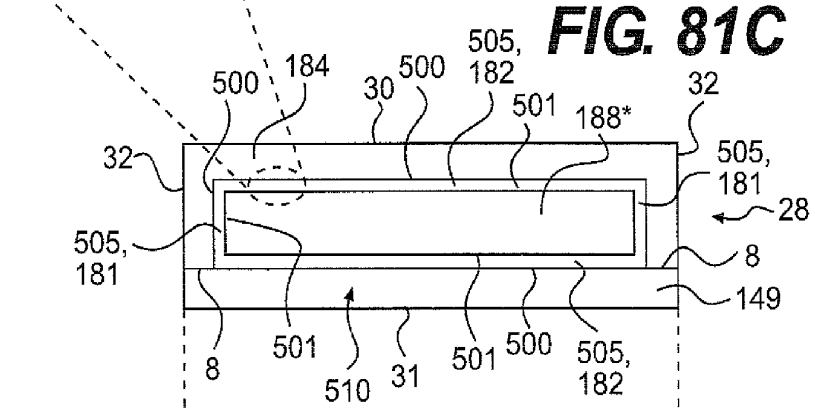

FIG. 81C

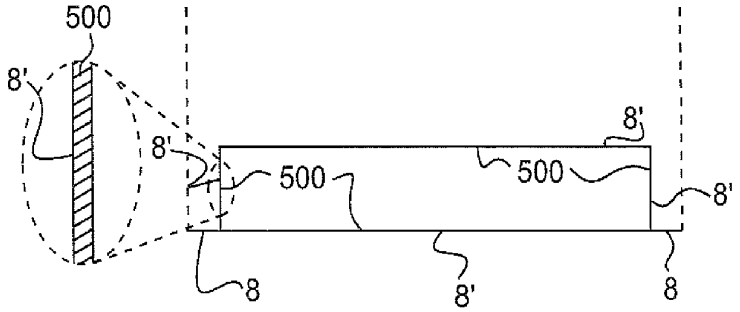

FIG. 81D

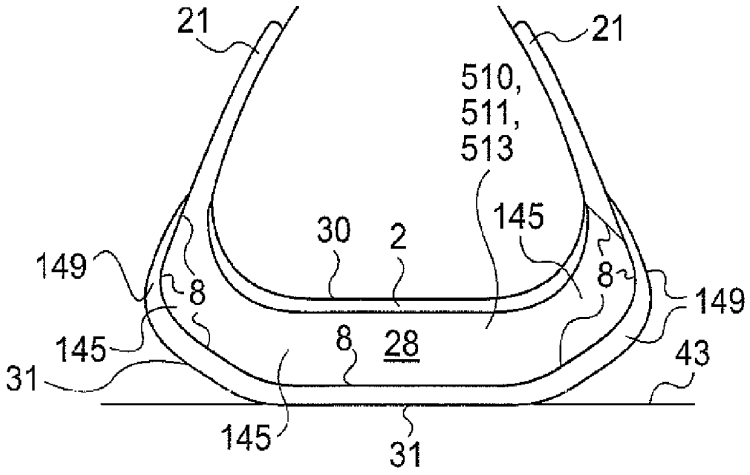

FIG. 82A

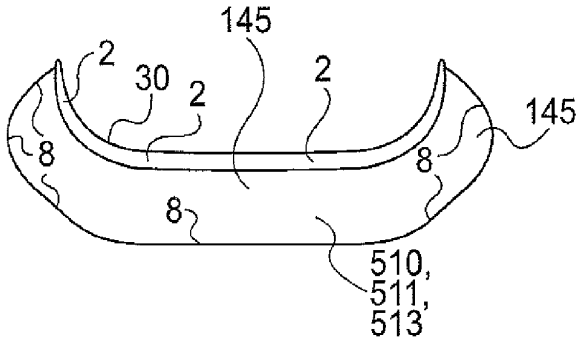

FIG. 82B

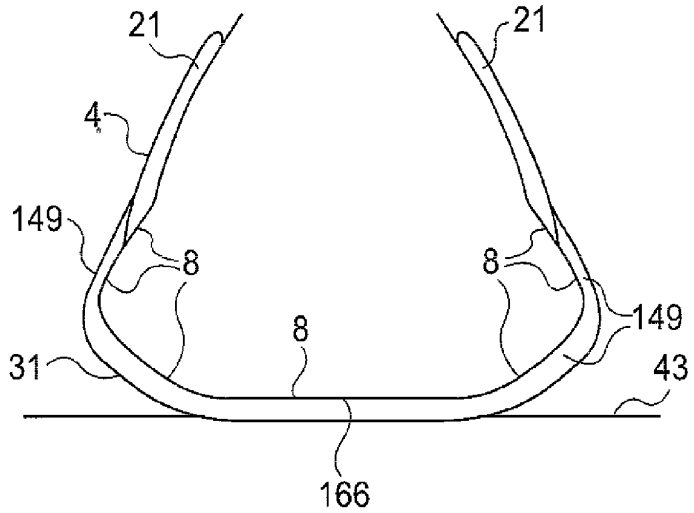

FIG. 82C

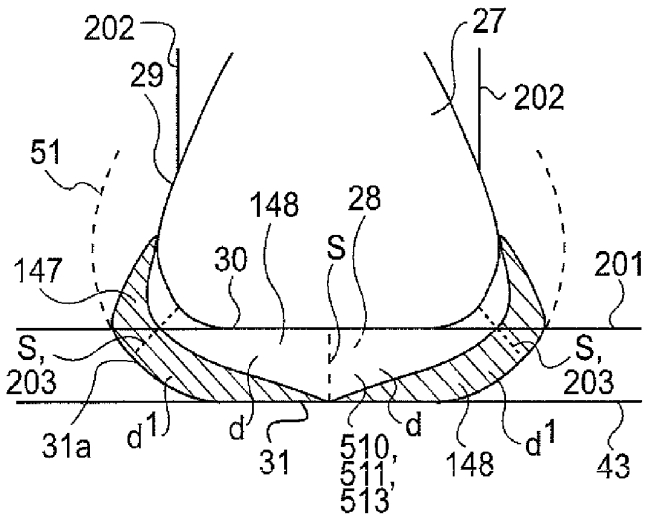

FIG. 83A

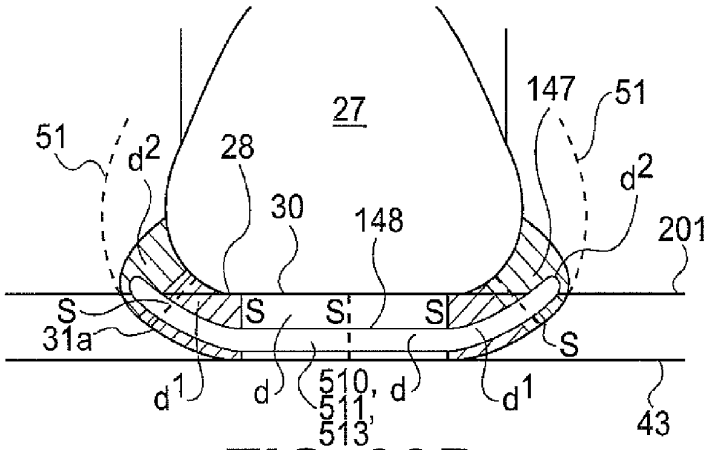

FIG. 83B

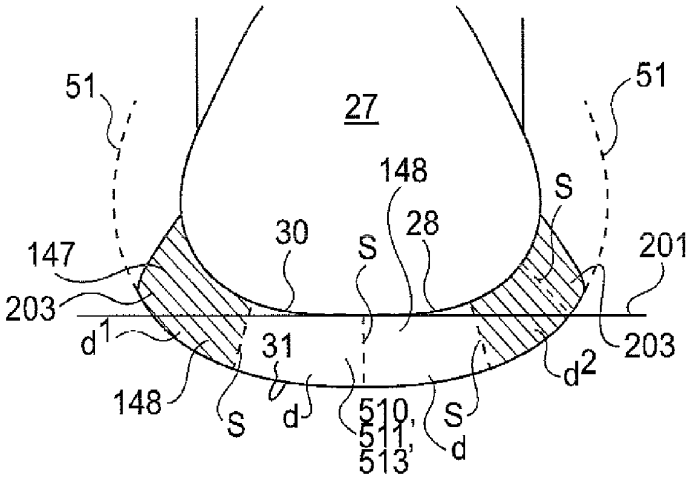

FIG. 83C

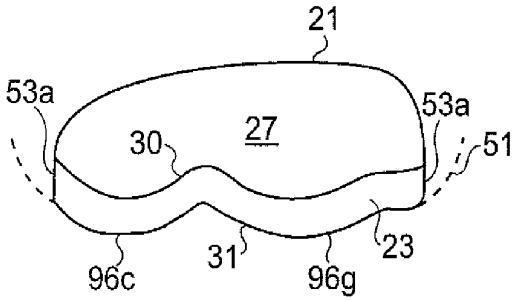

FIG. 84A

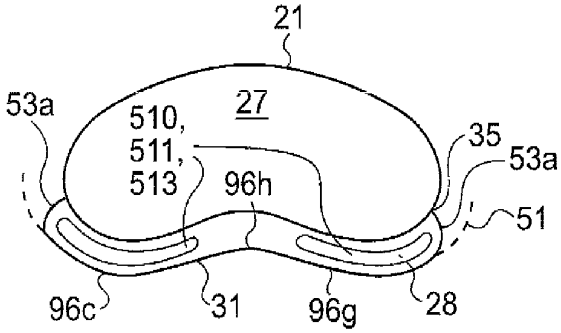

FIG. 84B

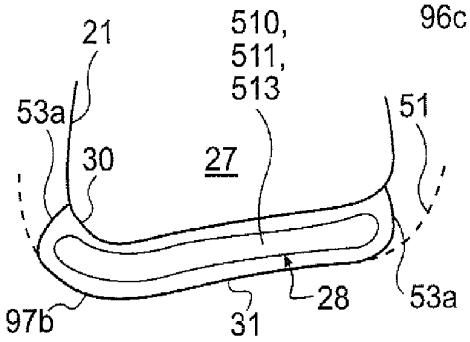

FIG. 84C

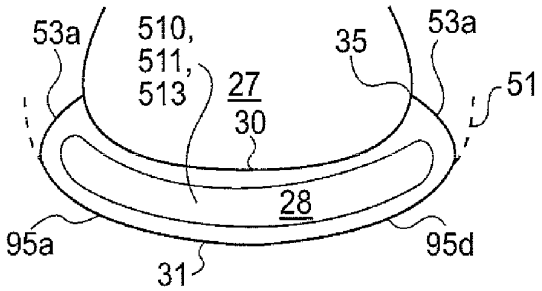

FIG. 84D

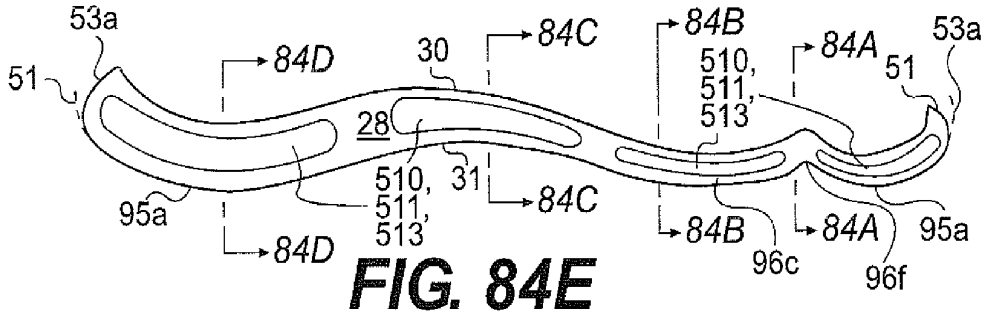

FIG. 84E

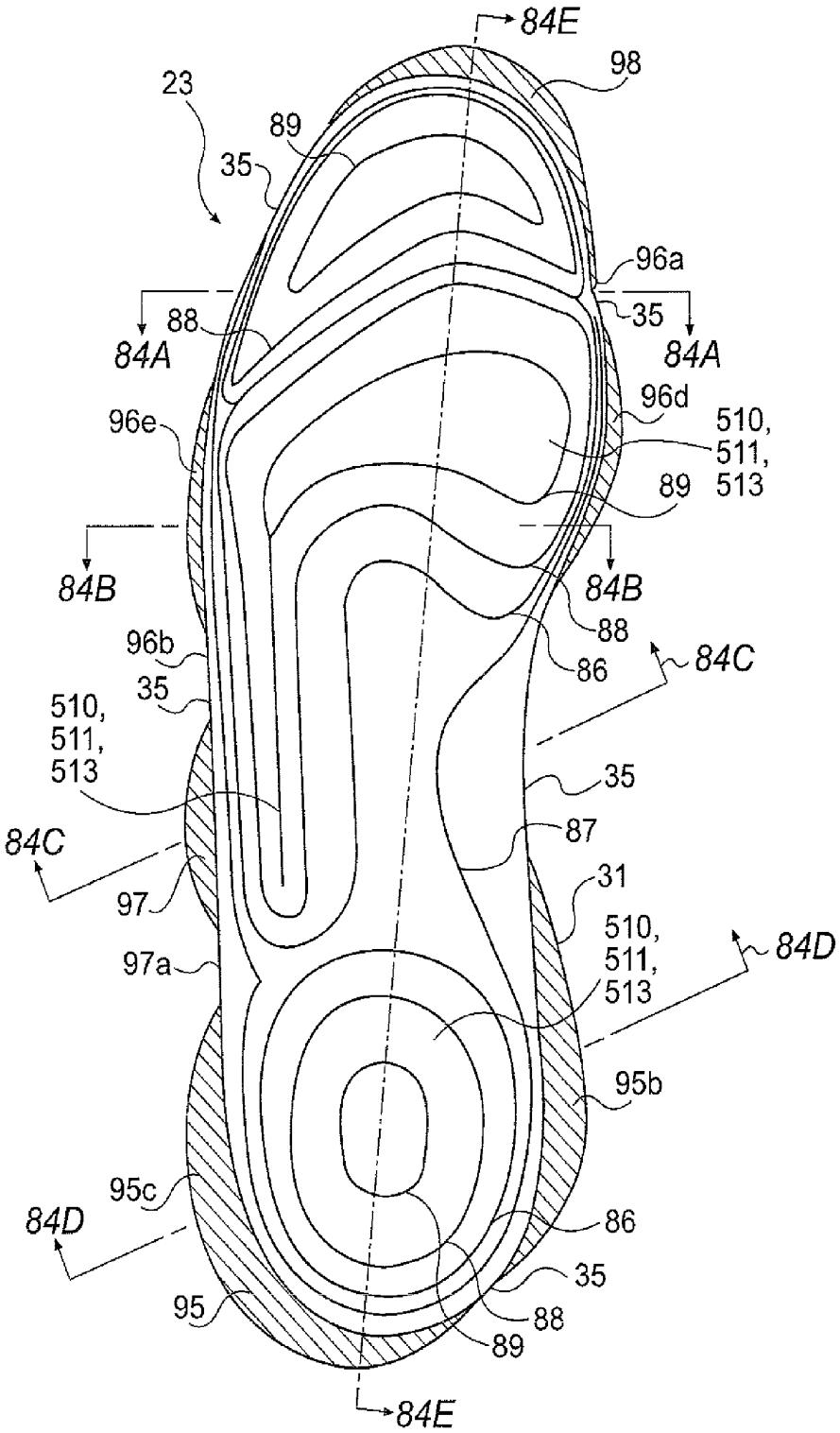
84E
98
23
89
35
96a
88
84A
84A
35
96d
96e
510,
511,
513
89
84B
84B
88
96b
86
84C
35
510,
511,
513
35
84C
87
31
97
510,
511,
513
84D
97a
95b
95c
84D
86
35
95
88
89
84E

FIG. 84F

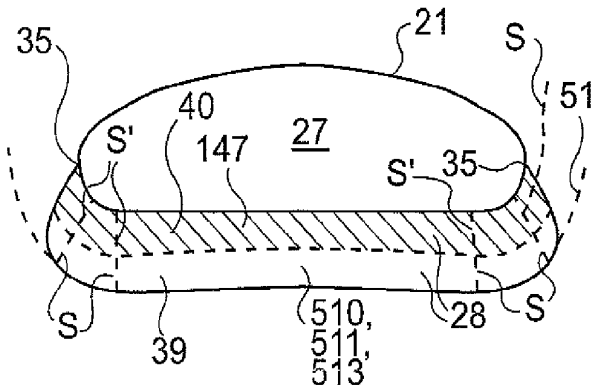

FIG. 85A

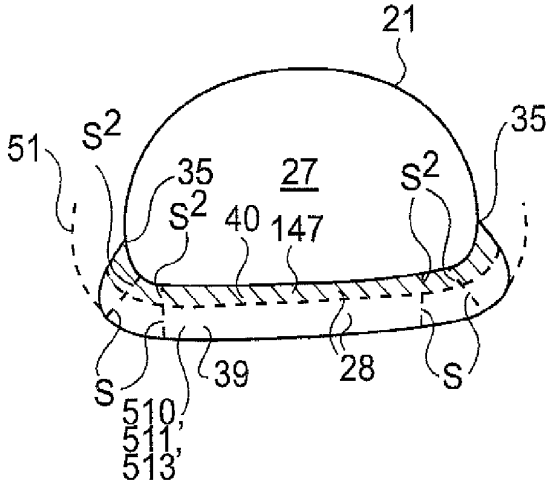

FIG. 85B

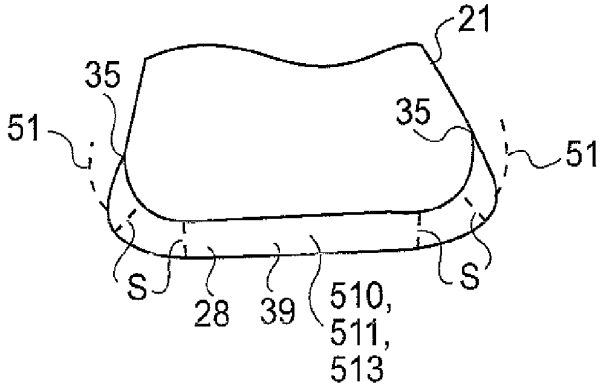

FIG. 85C

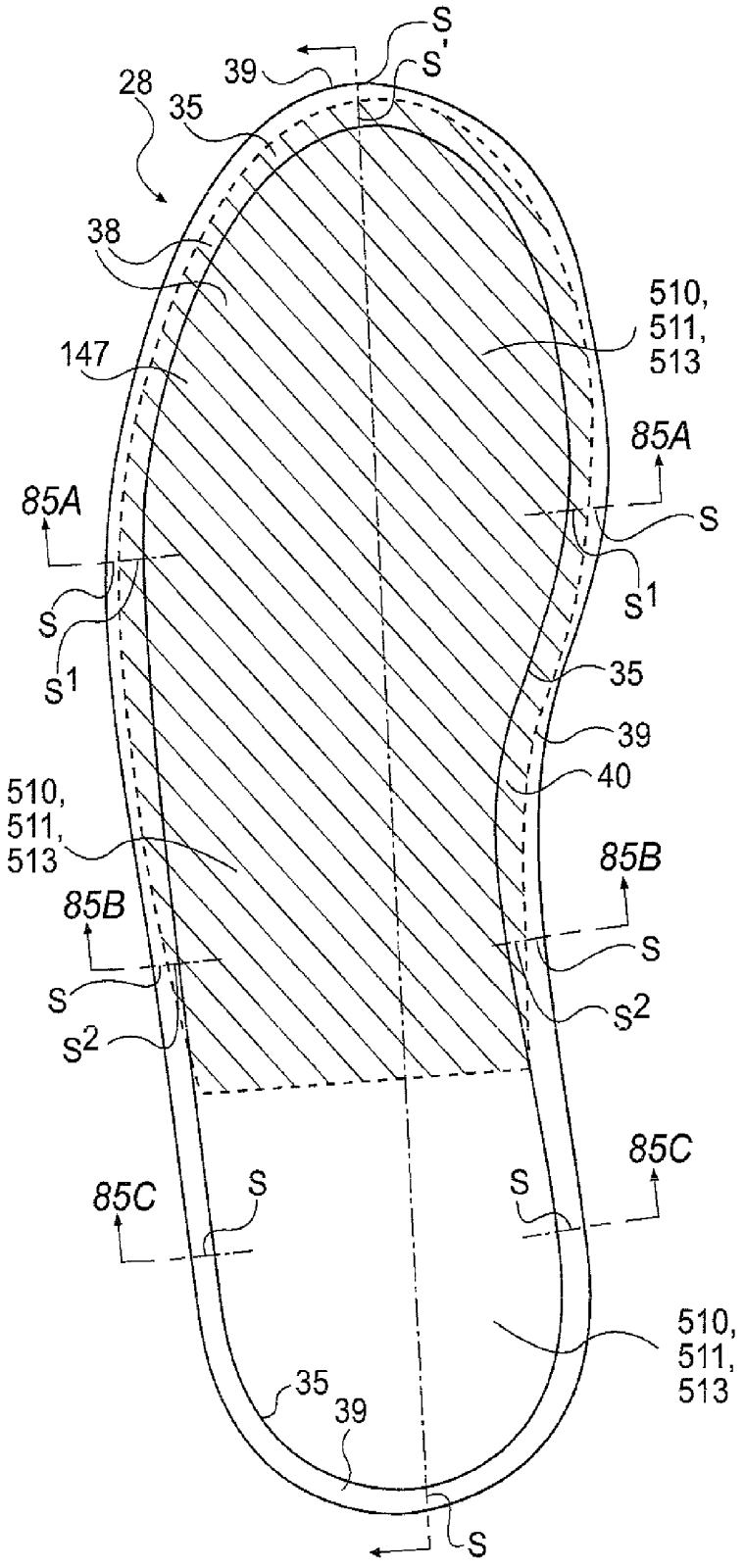
S
S
39
28
35
38
510,
511,
513
147
85A
85A
S
S1
S
S1
35
39
40
510,
511,
513
85B
85B
S
S
S2
S2
85C
85C
S
S
510,
511,
513
35
39
S

FIG. 85D

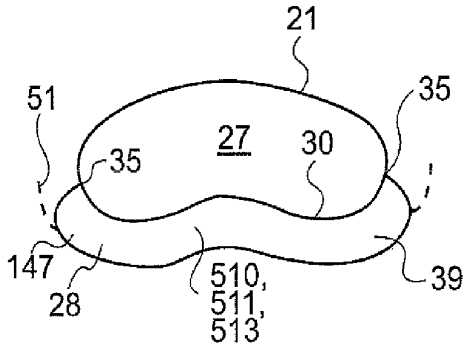

FIG. 86A

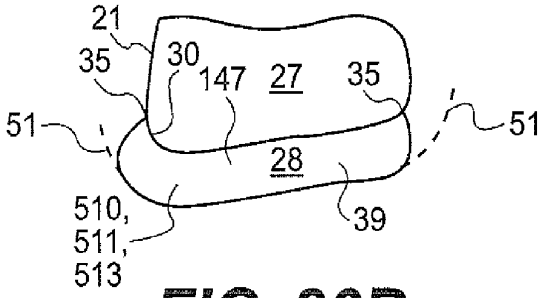

FIG. 86B

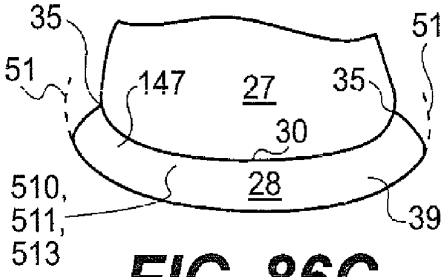

FIG. 86C

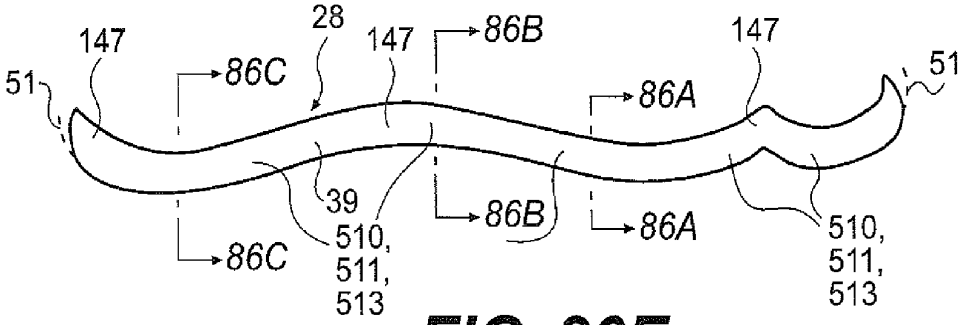

FIG. 86E

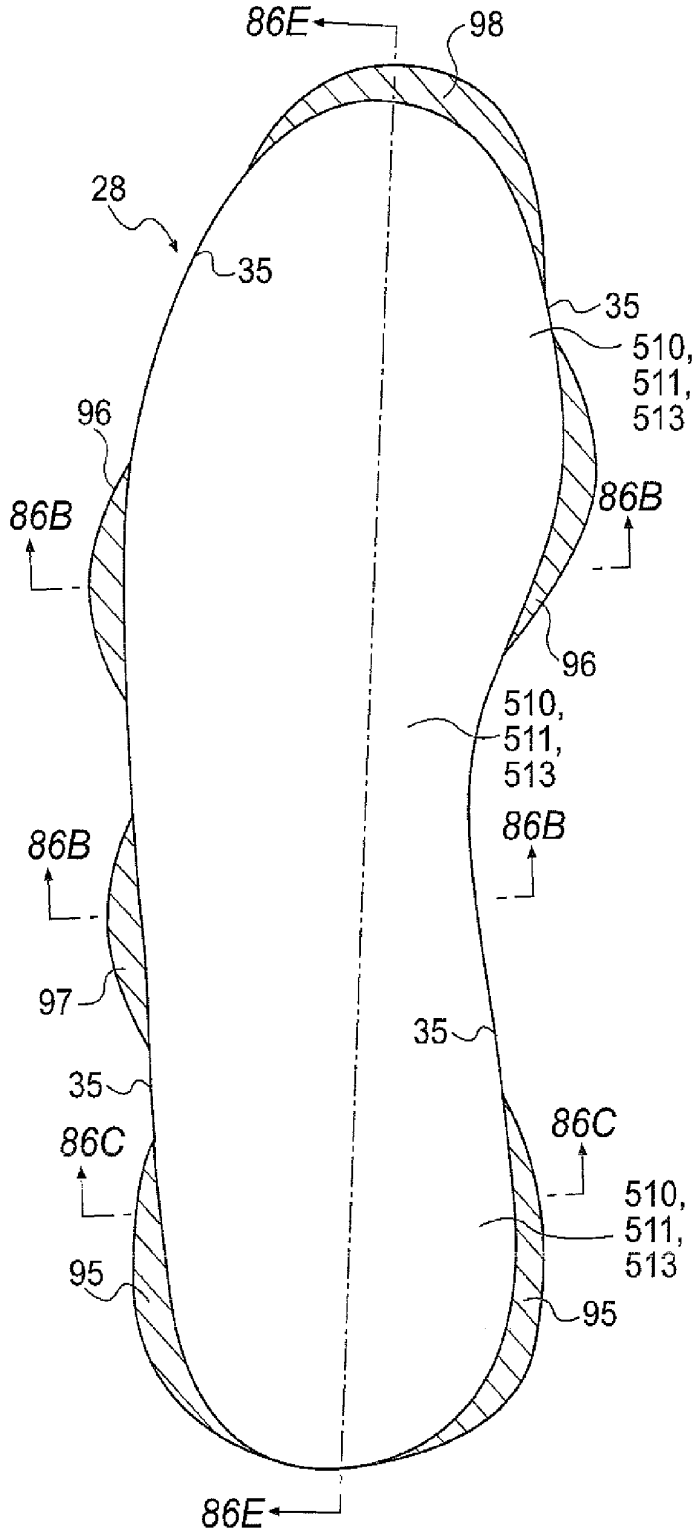
86E
98
28
35
35
510,
511,
513
96
86B
86B
96
510,
511,
513
86B
86B
97
35
35
86C
86C
510,
511,
513
95
95
86E

FIG. 86D

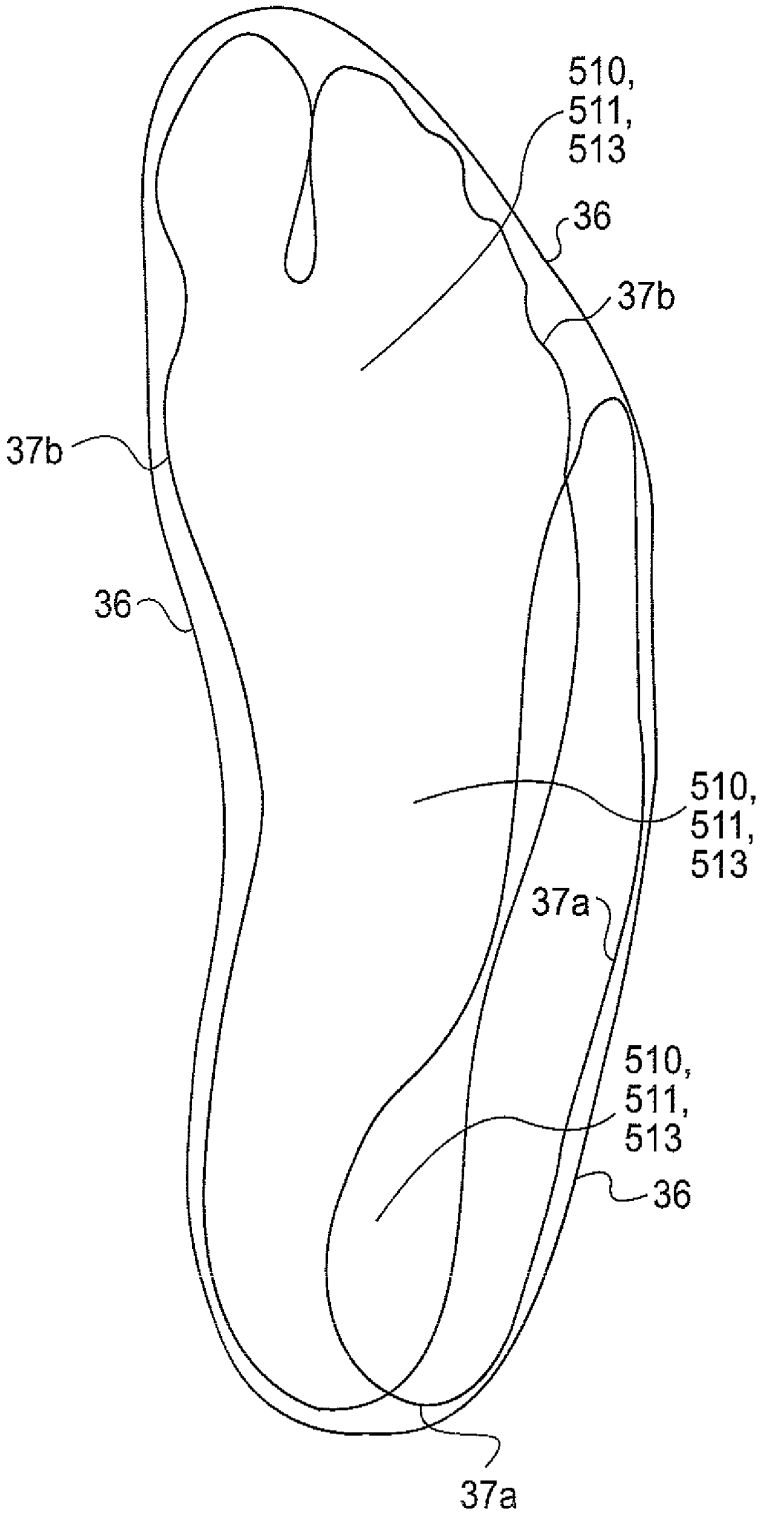

FIG. 87

HELMET AND/OR A HELMET LINER WITH AT LEAST ONE INTERNAL FLEXIBILITY SIPE WITH AN ATTACHMENT TO CONTROL AND ABSORB THE IMPACT OF TORSIONAL OR SHEAR FORCES

This application is a continuation of U.S. patent application Ser. No. 13/472,676, filed May 16, 2012 currently pending which is a continuation of U.S. patent application Ser. No. 13/457,990 filed Apr. 27, 2012, currently pending, Ser. No. 13/357,332, filed Jan. 24, 2012, currently pending, Ser. No. 11/802,930, filed May 25, 2007, currently pending, which, in turn, is a continuation-in-part of prior U.S. patent application Ser. No. 11/802,033, filed May 18, 2007, currently pending, which, in turn, is a continuation-in-part of U.S. patent application Ser. No. 11/282,665, filed Nov. 21, 2005, currently pending, which, in turn, claims the benefit of U.S. Provisional Application No. 60/629,384, filed Nov. 22, 2004, U.S. Provisional Application No. 60/629,385, filed Nov. 22, 2004, U.S. Provisional Application No. 60/629,523, filed Nov. 22, 2004, U.S. Provisional Application No. 60/633,664, filed Dec. 6, 2004, U.S. Provisional Application No. 60/634,781, filed Dec. 9, 2004, U.S. Provisional Application No. 60/634,782, filed Dec. 9, 2004, U.S. Provisional Application No. 60/672,407 filed Apr. 18, 2005, U.S. Provisional Application No. 60/677,538, filed May 4, 2005, U.S. Provisional Application No. 60/679,182, filed May 9, 2005, and U.S. Provisional Application No. 60/700,179, filed Jul. 18, 2005. U.S. patent application Ser. No. 11/802,033, filed May 18, 2007 claims the benefit of U.S. Provisional Application No. 60/801,381, filed May 19, 2006, U.S. Provisional Application No. 60/802,103, filed May 22, 2006, U.S. Provisional Application No. 60/802,779, filed May 24, 2006, and U.S. Provisional Application No. 60/808,819, filed May 26, 2006, all of which applications listed above are hereby incorporated herein by reference in their entirety.

BACKGROUND OF THE INVENTION

1. Field of the Invention

The invention relates to all forms of footwear, including street and athletic, as well as any other products benefiting from increased flexibility, better resistance to shock and shear forces, and more stable support. More particularly, the invention incorporates devices as a unitary integral insert or component with at least one internal (or mostly internal) sipe, including slits or channels or grooves and any other shape, including geometrically regular or non-regular, such as anthropomorphic (or animal) shapes, into a large variety of products including footwear using materials known in the art or their current or future equivalent, as well as materials that are very firm compared to those taught in the art.

Still more particularly, the unitary internal sipe insert or component provides improved flexibility to products utilizing them, as well as improved cushioning to absorb shock and/or shear forces, including through the use of firm materials, while also improving stability of support, and therefore the siped devices can be used in any existing product that provides or utilizes cushioning and stability. These products include human and other footwear, both soles and uppers, and orthotics; athletic, occupational and medical equipment and apparel; padding or cushioning, such as for equipment or tool handles and furniture; balls; tires; and any other structural or support elements in a mechanical, architectural or any other device. Still more particularly, the integral insert or component with at least one sipe, including in the form of a slit, can include a media such as a lubricant or glue of any useful characteristic such as viscosity or any material, including a magnetorheological fluid.

The invention further relates to at least one chamber or compartment or bladder surrounded, partially or completely, by at least one internal (or mostly internal) sipe, including at least partially in the form of a slit, for use in any footwear soles or uppers, or orthotic soles or uppers, including the use of firm materials, and for other flexibility, cushioning, and support uses in athletic equipment like helmets and apparel including protective padding and guards, as well as medical protective equipment and apparel, and other uses, such as protective flooring, improved furniture cushioning, balls and tires for wheels, and many other uses.

The internal sipe integral insert or component invention further can be usefully combined with the applicant's prior footwear inventions described in this application and expressly incorporated by reference herein below, including removable midsole structures and orthotics and chambers with controlled variable pressure, including control by computer, for example.

2. Brief Description of the Prior Art

Existing devices are generally much less flexible than would be optimal, especially products for human (or animal or other biological-based) users, whose non-skeletal anatomical structures like bare foot soles generally remain flexible even when made hard by significant pressure caused by body weight, whereas the products interfacing directly with them are often much more rigid.

Taking footwear soles as one example, cushioning elements like gas bladders or chambers or compartments are typically fixed directly in other midsole foam plastic material to form a structure that is much more rigid than the sole of the human wearer's bare foot, which is relatively soft when unloaded and hard but still flexible when loaded under body weight. As a result, the support and cushioning of the bare foot are seriously degraded when shod in existing footwear, since the relatively rigid shoe sole drastically alters by obstructing the way in which the bare foot would otherwise interact with the ground underneath a wearer. The effective natural interface is replaced by an inferior artificial one.

The use of open or external traction sipes—that is, sipes in the form of slits or channels that typically are substantially vertical and open to an outside surface, particularly a ground-contracting surface—to provide also flexibility in footwear soles has been fully described by the applicant in prior applications, including the examples shown in FIGS. 55A-55C, 56, 57, and 73A-73D of both the applicant's prior footwear U.S. patent application Ser. No. 11/190,087, published as Pub. No. 2005/0268487 A1 on Dec. 8, 2005, and the applicant's prior orthotic U.S. Pat. No. 7,010,869, issued Mar. 14, 2006, (as well as continuation U.S. application Ser. No. 11/108,034, published as Pub. No. 2005/0217142 A1 on Oct. 6, 2005), and in FIGS. 35-40 of U.S. patent application Ser. No. 11/179,887, published as Pub. No. US2005/0241183 on Nov. 3, 2005, all of which foregoing U.S. patents and published applications are herein incorporated by reference for completeness of disclosure.

The applicant first described such non-traction oriented open external sipes in footwear in PCT Application PCT/US90/06028 titled "Shoe Sole Structures Which Are Siped to Provide Natural Deformation Paralleling the Foot" filed 19 Oct. 1990 and published by WIPO as Int. Pub. No. WO 91/05491 on 2 May 1991. Such open external sipes principally provide flexibility to the footwear sole by providing the capability of the opposing surfaces of the sipe to separate easily from each other. However, external sipes are structur-

ally unlike natural anatomical structures (since to be effective, they must be much deeper than surface skin texture like finger prints, the closest anatomical analogy).

Also, external sipes tend to introduce significant instability by creating excessive edge weakness in the shoe sole adjacent the sipes, just like a paperback book being unable to support weight when standing on end with the pages vertical, but stable when the book and pages are lying flat. External sipes by being open also collect debris in the sipes, seriously reducing sipe performance. In addition, the most optimal pattern and depth of such sipes is unknown and therefore difficult to ascertain directly, except as an error-prone trial and error process guided by second-guessing nature, since deep, open sipes are obviously not used in the design of the human foot. Moreover, the only way to get relatively seamless, continuous natural flexibility like the human foot sole using external sipes is to introduce a very large number of deep sipes on as many different axis as possible in the shoe sole, which produces an impractically soft and unstable shoe sole, the use of which would be roughly like trying to stand on the edge of a large urban area telephone book.

Instead, a much more reasonable and fool-proof procedure is to follow as closely as practical the natural design of the human anatomical foot sole structure with which it is intended to interface to create the closest-to-natural flexibility.

The use of a integral component with internal sipes in footwear soles like those described in this application overcome the problems of external sipes noted above and are naturally more optimal as well, since they more closely parallel structurally the natural anatomical structures of the wearer's bare foot sole. As one example, simply enveloping the outer surface of existing cushioning devices like gas bladders or foamed plastic Ethyl Vinyl Acetate (EVA) or Polyurethane (PU) with a new outer layer of material that is unattached (or at least partially unattached) thereby can creates if unglued an internal sipe between the inner surface of the new compartment and the outer surface of the existing bladder/midsole component, allowing the two surfaces to move relative to each other rather than being fixed to each other.

Especially in the common form of a slit structure seen in many example embodiments, the flexibility of the internal sipe is provided by this relative motion between opposing surfaces that in many the example embodiments are fully in contact with each other, again in contrast to the separating surfaces of external sipes; such surface contact is, of course, exclusive of any internal sipe media, which can be used as an additional enhancement, in contrast to the flexibility-obstructing debris unavoidably picked up by, and often clogging, open external sipes. As a result, the footwear sole in which at least one integral internal sipe insert or component is incorporated becomes much more flexible, much more like the wearer's bare foot sole itself, so that foot sole can interact with the ground naturally. The resulting footwear sole with internal sipes has improved, natural flexibility, improved cushioning from shock and shear forces, and better, more naturally stable support.

A limited use of internal sipes has also been described by the applicant in prior applications, including the examples shown in FIGS. 12A-12D, 60A-60E, and 70-71 of both the applicant's '087 and '034 published Applications and '869 Patent herein incorporated by reference above, which are generally unglued portions coinciding with lamination layer boundaries, such as between bottomsole and midsole layers. This older approach requires completely new and somewhat difficult approaches in the assembly of the footwear sole during manufacture, as well as significantly greater potential for problems of layer separation (especially bottom sole) since the inherent reduction in gluing surfaces makes the remaining gluing surfaces critical and under increased load; significantly increased positional accuracy in the application of glue is required. Also, the use of lubricating media (and the potential control thereof, including by microprocessor) is also more difficult, since the sipe is formed by existing parts and is not discretely enclosed with the new outer layer to contain the media, as it is in a new invention described in this application.

In contrast, a new invention of this application is a discrete device in the form of an integral component that can easily be inserted as a single simple step into the footwear sole during the manufacturing process or, alternatively, inserted in one single simple step by a wearer (into the upper portion of a midsole insert, for example, much like inserting an insole into an shoe), for whom the new extra layer provides buffering protection for the wearer from direct, potentially abrasive contact with a cushioning component (forming a portion of the inner, foot sole-contacting surface of the shoe sole, for example).

In addition, such a new invention allows easier and more effective containment of a lubricating media (including media with special capabilities, like magnetorheological fluid) within the integral internal sipe, so that the relative motion between inner surfaces of the sipe can be controlled by that media (and, alternatively, by direct computer control); it avoids the need for the use of closed-cell midsole materials or a special impermeable layer applied to the footwear sole material to prevent the sipe media from leaking away.

The new invention also makes manufacturing easier and inherently more accurate, since the introduction of the fluid media can be better control during a separate process when the separate unitary insert or component **510/511/513** is manufactured by itself, rather than attempting to integrate that process into the already complex sole or orthotic molding and assembly process.

Accordingly, it is a general object of one or more embodiments of the invention to elaborate upon the application of the use of a device in the form of an insertable integral component with one or more internal sipes to improve the flexibility, cushioning, and stability of footwear and other products.

It is still another object of one or more embodiments of the invention to provide footwear having an integral insert or component with at least one internal (or mostly internal) sipes, including slits or channels or grooves and any other shape, including geometrically regular or non-regular, such as anthropomorphic or animal shapes, to improve flexibility, cushioning and stability.

It is still another object of one or more embodiments of the invention to include an insertable integral device with one or more internal sipes that include a media such as a lubricant or glue of any useful characteristic such as viscosity or any material, including a magnetorheological fluid.

It is another object of one or more embodiments of the invention to create a shoe sole with flexibility, support and cushioning that is provided by siped chambers or compartments or bladders in the footwear sole or upper or orthotics. The compartments or chambers or bladders are surrounded, partially or completely, by at least one internal (or mostly internal) sipe, including in the form of a slit, for use in any footwear soles or uppers, or orthotic soles or uppers, and for other flexibility, cushioning, and stability uses in athletic equipment like helmets and apparel including protective padding and guards, as well as medical protective equipment and

apparel, and other uses, such as protective flooring, improved furniture cushioning, balls and tires for wheels, and many other uses.

It is another object of one or more embodiments of the invention to create footwear, orthotic or other products with at least one outer chamber; at least one inner chamber inside the outer chamber; the outer chamber and the inner chamber being separated at least in part by an internal sipe, including in the form of a slit; at least a portion of an inner surface of the outer chamber forming at least a portion of an inner surface of the internal sipe; and the internal sipe providing increased flexibility, cushioning, and stability for the footwear, orthotic or other product.

A further object of one or more embodiments of the invention is to combine the integral insert or component with at least one internal sipe with the applicant's prior footwear inventions described and herein incorporated by reference in this application, including removable midsole structures and orthotics and chambers with controlled variable pressure, including control by computer.

These and other objects of the invention will become apparent from the summary and detailed description of the invention, which follow, taken with the accompanying drawings.

SUMMARY OF THE INVENTION

In one aspect the present invention attempts, as closely as possible, to replicate and interface with the naturally effective structures of the bare foot that provide flexibility, cushioning, and stable support. More specifically, the invention relates to a device for a footwear sole or upper or both, or an orthotic or orthotic upper or both, or other, non-footwear devices, including a unitary internal sipe insert or component, said internal sipe providing increased flexibility for said device. More specifically, the invention relates to an integral insert or component with at least one slit with a media such as a lubricant or glue of any useful characteristic such as viscosity or any material, including a magnetorheological fluid.

Even more specifically, the invention relates to footwear or orthotics or other products with at least one compartment or chamber or bladder surrounded, partially or completely, by at least one internal (or mostly internal) sipe, including in the form of a slit, for use in any footwear soles or uppers, or orthotic soles or uppers, and for other flexibility, cushioning, and stability uses. Even more specifically, the invention relates to footwear, orthotic or other products with at least one outer chamber; at least one inner chamber inside the outer chamber; the outer chamber and the inner chamber being separated at least in part by an internal sipe, including in the form of a slit; at least a portion of an inner surface of the outer chamber forming at least a portion of a surface of the internal sipe; and the internal sipe providing increased flexibility, cushioning, and stability for the footwear, orthotic or other product.

These and other features of the invention will become apparent from the detailed description of the invention that follows.

BRIEF DESCRIPTION OF THE DRAWINGS

FIGS. **1-44** of this application are FIGS. 83-127 of both the applicant's U.S. application Ser. No. 11/282,665 filed Nov. 21, 2005 and published on Nov. 9, 2006 as Pub. No. US 2006/0248749 A1 and PCT Application PCT/US2005/042341 filed 21 Nov. 2005 and published on 1 Jun. 2006 as Int. Pub. No. WO 2006/058013 A2, both of which are incorporated herein by reference.

FIGS. **1A-4A** show a frontal or sagittal plane cross section view of an example of a device **510** such as a flexible insert with a siped compartment or chamber or bladder.

FIGS. **1B-6B** show a top view in a horizontal plane of a device **510** example of FIGS. **1A**, **2A**, **3A**, **4A**, **5A** and **6A**.

FIG. **1C** is an exploded perspective view showing the relationship of an insert device **510**, which has a siped compartment or chamber or bladder, with a midsole, bottom sole, and upper of a shoe or other footwear.

FIGS. **5A-6A** show a frontal or sagittal plane cross section view of an example of a device **510** such as a flexible insert with two siped compartments or chambers or bladders or combination.

FIG. **7** shows, in a frontal plane cross section in the heel area, a shoe and shoe sole including a single siped compartment **510**.

FIG. **8** shows a similar embodiment and view to that shown in FIG. **7**, including also an attachment **503** between **500** and **501**.

FIG. **9** shows a similar embodiment and view to that shown in FIG. **7**, including also an inner compartment/chamber **501** with a number of inner compartment structural elements **502**.

FIG. **10** shows a similar embodiment and view to that shown in FIG. **7**, including also more than one siped compartment **510**.

FIGS. **11** and **12** show a similar embodiment and view to that shown in FIG. **7**, including also more than one inner compartments **501** in an outer compartment **500**.

FIGS. **13** and **14** show similar embodiments and views to that shown in FIG. **7**, but wherein the outer compartment/chamber/bladder **500** forms substantially all of the midsole portion of the footwear sole (exclusive of the outer sole).

FIG. **15** shows a similar embodiment and view to that shown in FIG. **7**, but also including the features of prior FIG. 11N of the '087 and '034 published Applications (as well as the Ser. No. 11/282,665 Application published Nov. 9, 2006 as Pub. No. 2006/0248749 A1 incorporated by reference) and '869 Patent incorporated by reference herein, with the siped compartment/chamber/bladder **510** applied to it.

FIG. **16** shows a somewhat similar embodiment and view to that shown in FIG. **10**, but including an electromagnetic shock absorption system in each chamber, which are without sipes.

FIG. **17A** shows a similar embodiment and view to that shown in FIG. **15**, but including an electromagnetic shock absorption system. FIG. **17B** is a close-up view of an embodiment like FIG. **7**, but showing magnetorheological fluid **508** located within an internal sipe **505**.

FIG. **18A** shows, in a frontal or sagittal plane cross section, a flexible insert or component **511** including a single compartment/chamber **161/188** or bladder with an associated internal sipe **505** component. FIG. **18B** shows a top horizontal plane view of flexible insert or component **511** of FIG. **18A**. FIG. **18C** is an exploded perspective view showing the relationship of an insert device **511**, which has a compartment or chamber or bladder and an internal sipe, with a midsole, bottom sole, and upper of a shoe or other footwear.

FIG. **19A** shows, in frontal or sagittal plane cross section, a flexible insert or component **513** forming a unitary internal sipe. FIG. **19B** is a top horizontal plane view of flexible insert or component **513** of FIG. **19A**. FIG. **19C** is an exploded perspective view showing the relationship of an insert device **513**, which can be a thin compartment or chamber or bladder

forming an internal sipe such as a slit, with a midsole, bottom sole, and upper of a shoe or other footwear.

FIG. **20**A shows, in frontal or sagittal plane cross section, the FIG. **19**A embodiment of a unitary internal sipe **513** position as a separate component in a footwear sole. FIG. **20**B is like FIG. **19**B and thus shows a top horizontal plane view of flexible insert or component **513** of FIG. **20**A. FIG. **20**C shows a frontal plane cross section of an insert device **513** as a thin compartment or chamber or bladder forming an internal sipe such as a slit, the device being located in a footwear sole.

FIG. **21**A shows, in frontal or sagittal plane cross section, the unitary internal sipe **513** in an embodiment including three separate internal flexibility sipes **505**. FIG. **21**B is like FIG. **19**B and thus shows a top horizontal plane view of flexible insert or component **513** of FIG. **21**A.

FIG. **22** shows, in frontal plane cross section in the heel area, a flexible insert or component **510** used in the footwear upper **21**.

FIG. **23** shows, in frontal plane cross section in the heel area, a flexible insert or component **510** used both in the footwear upper **21** and in the sole **22** or **28**.

FIGS. **24**A and **24**B show, in frontal plane cross section, two example embodiments of any helmet **550** for any use with a cushioning helmet liner **551** including an inner flexible insert or component **510**.

FIGS. **24**C and **24**D show, in frontal plane cross section, two example embodiments of any helmet **550** for any use including one or more internal sipes **505**

FIGS. **24**E and **24**F show, in frontal plane cross section, structural elements **502** and openings of the inner compartment/chamber/bladder **501** according to one embodiment of a helmet **550** and a helmet liner **551** of the present invention. FIG. **24**G shows, in frontal plane cross section, layers and fiber **518** in the inner compartment/chamber/bladder **501** according to one embodiment of a helmet **550** and a helmet liner **551** of the present invention.

FIGS. **25**A and **25**B, as well as FIGS. **26**A and **26**B, show a heel section of a footwear sole or orthotic with an example of a flexible insert or component **510** using specific examples of the structural elements **502**.

FIG. **26**C shows an example in a horizontal plane cross-section of a footwear sole **22** of a device or flexible insert or component **510** in which the inner compartment **501** includes a flexible shank **514** located in the media **504** in the general area of the instep of the shoe sole between the heel area and the forefoot area. FIG. **26**D shows two different examples of versions of the flexible shank **514** in frontal plane cross section.

FIGS. **27**A-**27**B show in cross-section an example of any ball **530** with one or more internal sipes **505** of any shape located between the outer surface of the ball and an inner surface.

FIG. **28**A shows in cross-section an example of a tire **535**, such as for a wheel of a transportation vehicle, with a device **510**. FIG. **28**B shows in a side view cross-section an example of shape of structural elements **502** of the inner compartment **501**.

FIG. **29**A shows, in sagittal plane cross sections, two examples of prior art human breast implants, the first inserted over pectoral muscle and the second inserted under pectoral muscle. FIG. **29**B shows an example of a human breast implant **540** with a siped compartment or chamber **510**.

FIGS. **30**A-**30**J show cross sectional examples of any structural or support element **550** in any device, including mechanical or architectural, including a beam or strut, or a tool or racquet handle or grip, shaft or body, or head, that incorporates a siped chamber **510**.

FIG. **31**A shows examples of prior art golf clubs. FIG. **31**B shows an example of a golf (or other) club head or racket (or tool head or body or handle/grip) **550** with one or more internal sipes **505**.

FIG. **32**A shows in perspective view an example of a prior art artificial spinal or intervertebral disk. FIG. **32**B shows in frontal plane cross section an example of an artificial spinal or intervertebral disk **560**, including any artificial joint disk or any other surgical or prosthetic device with one or more internal sipes **505** of any form, including a siped compartment **510**.

FIGS. **33**A-**33**E and **35** show frontal plane cross section examples of shoe soles **22** or **28** or midsole insert or orthotics **145** with several planar sides to approximate curvature from the applicant's published '034 application and WIPO publication No. WO 02,09547, which can be combined with the flexible insert or components **510**, **511**, or **513**;

FIG. **34** shows a similar top view example.

FIG. **36** shows prior art from the automotive industry relating to magnetoelectric cushioning systems shown in FIGS. **16** and **17**.

FIGS. **37**-**42** show perspective views of prior art examples gas bladders of Nike Air™ (**119**-**123**), which are FIGS. 12-16 of U.S. Pat. No. 6,846,534 and Zoom Air™ (**124**-**126**), which are FIGS. 1-2 of published U.S. Patent Application 2005/0039346 A1.

FIG. **43** is a cross-sectional view along line **43**-**43** of FIG. **42** and is a prior art example of a gas bladder as shown in FIG. 3 of published U.S. Patent Application 2005/0039346A1.

FIG. **44** shows perspective views of prior art Adidas 1™ shoe sole electronic/electromechanical cushioning system.

FIG. **45** shows a shoe sole or orthotic frontal plane cross-section of a siped compartment **510** with an inner compartment **501** having multiple midsole layers.

FIG. **46** shows a show sole or orthotic frontal plane cross-section of a siped compartment **510** with an inner compartment **501** having a multitude of ball bearing-like structures.

FIG. **47** shows a shoe sole or orthotic frontal plane cross-section of a siped compartment **510** with fiber reinforcing an inner or outer compartment.

FIG. **48**A shows a shoe sole or orthotic frontal plane cross-section of a siped compartment **510** with fiber sandwiched between two separate layers of midsole; FIG. **48**B shows a similar embodiment example frontal plane cross-section with fiber embedded in midsole layers. FIGS. **48**C-**48**E show material using vertical sipe embodiment examples from FIGS. 73A-73C of the '665 Application like FIGS. **25** and **26** of this application.

FIGS. **49**-**50**, **51**A-**51**B, and **52**A-**52**C show examples of the **510** invention using typical commercial air bladder embodiments as compartments **501** modified with outer compartments **500**.

FIG. **53** shows an example wheel for an automobile with the **510**/**511**/**513** inventions.

FIG. **54** show prior art tire example.

FIG. **55** shows a shoe sole or orthotic frontal plane cross-section of a siped compartment **510** with a mixture plastic and rubber compounds.

FIG. **56** shows a shoe sole or orthotic frontal plane cross-section of a siped compartment **510** with a mixture of liquid or gel cells.

FIG. **57** shows a tire with an internal sipe **505** with a media **506** and/or fiber **516** between and inner and outer tires.

FIG. **58** shows a tire with magnetorheological fluid **508** and piezoelectric **519** components

FIG. **59** shows a glove with the **510**/**511**/**513** inventions.

FIGS. **60**A-**60**C shows apparel with the **510/511/513** inventions.

FIG. **61**A shows a computer laptop with the **510/511/513** inventions and FIG. **61**B shows a semiconductior microchip with the **510/511.513** inventions.

FIG. **62** shows a chair with the **510/511/513** inventions.

FIGS. **63-65** shows a mattress, pillow, and wedge cushion with the **510/511/513** inventions.

FIG. **66** shows a cable with the **510/511/513** inventions.

FIG. **67** is a chart showing approximate comparison of hardness scales.

FIG. **68** shows a building with the **510/511/513** inventions.

FIGS. **69-70** shows torso and knee braces.

FIGS. **71-72** shows automobile examples of the **510/511/513** inventions.

FIGS. **73**A-**73**B shows a tennis racquet with the **510/511/513** inventions.

FIGS. **74-79** show additional examples of the **510/511/513** inventions applied to electronic game controllers, manual tools, electric tools, bicycle, and cell phone.

FIGS. **80**A-**80**C show a large urban telephone book lying flat, solid wooden block, and an upright very thick book to illustrate basic concepts of sipe flexibility and stability.

FIGS. **81**A-**81**D show the much larger and more conventional attachment area between midsole and bottomsole for a shoe sole or orthotic with the **510/511/513** invention of FIGS. **81**C-**81**D compared to prior shoe sole sipe inventions of FIGS. **81**A-**81**B.

FIGS. **82**A-**82**C, **83**A-**83**C, **84**A-**84**F, **85**A-**85**D, **86**A-**86**E and **87** illustrate further embodiments of the use of siped compartments or chambers (**510**) and/or flexible inserts and internal sipe components (**511** and **513**) with different shoe sole configurations. FIGS. **82**A-**82**C, **83**A-**83**C, **84**A-**84**D, **85**A-**85**C, **86**A-**86**C are frontal plane cross sections with the locations of the cross-sections of FIGS. **84**A-**84**D shown in FIGS. **84**E-**84**F, the location of the cross-sections of FIGS. **85**A-**85**C shown in FIG. **85**D and the location of the cross-sections of FIGS. **86**A-**86**C shown in FIGS. **86**D-**86**E. FIG. **84**E is a sagittal plane cross-section along line **84**E-**84**E of FIG. **84**F. FIGS. **84**F, **85**D and **86**D are a horizontal plane cross-sections. FIG. **86**E is a sagittal plane cross-section along line **86**E-**86**E of FIG. **86**D.

It is understood that the reference numbers identified in this application and in U.S. patent application Ser. No. 11/282,665, incorporated by reference herein, are used consistently throughout the application such that like reference numbers are used to describe the same or like elements.

DETAILED DESCRIPTION OF THE PREFERRED EMBODIMENTS

FIGS. **1-79** show the applicant's inventions incorporating forms of insertable devices with one or more internal (or mostly internal) sipes, including slits (or channels or grooves and other shape, including geometrically regular or non-regular shapes, such as anthropomorphic shapes), into a large variety of products, including footwear and orthotics, athletic, occupational and medical equipment and apparel, padding for equipment and furniture, balls, tires and any other structural or support elements in a mechanical, architectural or any other device.

New reference numerals used in the FIGS. **1-79** are further defined as follows:

Ref. No **500**: An outer compartment, such as an outer compartment **161** or chamber **188** or bladder, at least partially or mostly or entirely enclosing a space within the outer compartment/chamber/bladder **500**, which can be located anywhere in a footwear sole or upper or both or other article described in this application. Construction and materials can be, as one embodiment example, simpler in shape but otherwise similar to those used in any commercial samples of Nike Air™.

Ref. No **501**: An inner compartment, such as an inner compartment **161** or chamber **188** or bladder, is located inside the enclosed space of the outer compartment/chamber/bladder **500**. Construction and materials of the inner compartment/chamber/bladder **501** can be, as one embodiment example, like those used in any commercial samples of gas bladders in Nike Air™.

Ref. No. **502**: Structural element that is optional anywhere within either outer compartment/chamber/bladder **500** or inner compartment/chamber/bladder **501**, of which a **501** embodiment is shown; any flexible, resilient material can be used, including structures molded into the shape of (and using the material of) the compartment/chamber/bladder **500** or **501**, as is very common in the art, such as many commercial samples of gas bladders used in Nike Air™, as well as foamed plastic or plastic composite or other materials, like Nike Shox™ or Impax™ or Reebok DMX™ or New Balance N-ergy™. In addition, other materials can be used directly within a **501/500** compartment or can connected to or through a **501/500** compartment, as in the cushioning components of the shoe sole heel of commercial samples of Adidas 1™, including electromechanical, electronic, and other components. Some devices may benefit from the use of rigid or semi-rigid materials for part or all of a media within a compartment.

Ref. No. **503**: Attachment of two compartment/chambers/bladders **500/501**, including particularly attachment of outer **500** to inner **501**; any practical number of attachments of any form using any materials can be used, including glue.

Ref. No. **504**: Media contained within all or part of compartment/chamber/bladder **500** or **501**, particularly **501**, can be any useful material, such as gas (including, as an example, gas used in Nike Air™ or ambient air, liquid or fluid, gel, or foam (such as a plastic like PU or EVA or equivalent or rubber (natural or synthetic) or combination of two or more; encapsulation of foam is optional); material particles or coatings, such as dry coatings like polytetrafluoroethylene can also be used. An optional element in an outer compartment/chamber **500** (or an inner compartment/chamber **501** that itself contains an inner compartment/chamber, as in FIG. **87**).

Ref. No. **505**: Internal sipe or slit or channel or groove for flexibility, such as between inner and outer compartment/chamber **500/501** (or bladder) surfaces, as one embodiment example; such surfaces can be substantially parallel and directly contact in one useful embodiment example, but are not attached so that at least parts of the two surfaces can move relative to each other, such as to facilitate a sliding motion between surfaces; the surfaces can be in other useful forms that allow portions of the surfaces to be proximate to each other but not contacting in an unloaded condition or in a partially loaded condition or in a maximally loaded condition.

Ref. No. **506**: Media of internal sipe **505**; media **506** can be any useful material like those used in media **504**; media **506** can be located in part or all of **505** to decrease (or increase) sliding resistance between **500/501** or **505** surfaces, for example, to lubricate the surfaces with any suitable material; silicone or polytetrafluoroethylene can be used, for example; an optional element.

Ref. No. **507**: Metal particles.

Ref. No. **508**: Shock absorbing fluid containing **507**; a magnetorheological fluid.

Ref. No. **509**: Electromagnetic field-creating circuit.

Ref. No. **510**: A flexible insert or component including siped compartments **161** or chambers **188** or bladders used for example as outer and inner compartments/chambers/bladders **500/501** for footwear soles or orthotics or uppers or other uses; a useful embodiment being two or more compartment or chambers (or bladders) **161/188** (or mix) that are separated at least in part by an internal sipe **505**, including the example of at least one **501** (either **161/188** or bladder) inside at least one **500** (either **161/188** or bladder) and being separated by an internal sipe **505**.

Ref. No. **511**: A flexible insert or component including a single compartment **161** or chamber **188** or bladder with an associated internal sipe **505** component.

Ref. No. **512**: A wall of flexible insert or component **511** or **513** that is not formed by a compartment **161** or chamber **188** or bladder and that is separated from another wall by an internal sipe **505**.

Ref. No. **513**: Any flexible insert or component including an internal sipe **505**.

Ref. No. **514**: A flexible shank located generally in an instep area of a shoe sole and incorporated in a **510/511/513** device described herein previously.

Ref. No. **516**: Ball bearings

Ref. No. **517**: Liquid or gel cells

Ref. No. **518**: Fibers

Ref. No. **519**: Piezoelectric components

Ref. No. **521**: Plastic or plastic-based compound

Ref. No. **522**: Rubber or rubber-based compound

Ref. No. **530**: Any ball with a device **510/511/513** described herein previously.

Ref. No. **535**: A tire (for a wheel) or a wheel **533** with a device **510/511/513** described herein previously and treads **536**, as well as steel belts **537**.

Ref. No. **540**: A human breast implant with a device **510/511/513** described herein previously.

Ref. No. **545**: Transportation vehicle including its interior **546** with a device **510/511/513**.

Ref. No. **550**: Any structural or support element with a device **510/511/513** described herein previously, including a helmet or other apparel or equipment for humans or animals or other biologically based product; or a tool (power or manual), club, or racquet handle, grip, shaft, body, or head; a beam or strut or any other element in any device, including mechanical or architectural.

Ref. No. **560**: An artificial spinal or intervertebral disk with a device **510/511/513** described herein previously.

Ref. No. **570**: Apparel or clothing, including gloves **571**, with a device **510/511/513**.

Ref. No. **580**: Computer

Ref. No. **590**: Furniture

Ref. No. **610**: Cable of wire or glass fiber.

Ref. No. **620**: Building, including house.

Ref. No. **630**: Human body braces.

FIGS. **1-15**, **17**, and **22-79** show, as numeral **510**, examples of a device or flexible insert including siped compartments **161** or chambers **188** or bladders (another term used in the art) for use in any footwear soles, including conventional soles **22** or the applicant's prior inventions, including footwear/shoe soles **28** and midsole inserts **145** as described in applicant's published '087 Application and U.S. application Ser. No. 11/282,665 published Nov. 9, 2006, as Pub. No. US 2006/0248749 A1 incorporated by reference, or for orthotics **145** as described in the applicant's published '034 U.S. Application, '869 Patent, and WO 02/09547 WIPO publication, as well as to be published by WIPO PCT Application Number PCT/US2005/042341, all incorporated by reference herein, including for uppers for footwear or orthotics (or including uppers), or for other flexibility uses in athletic equipment like helmets and apparel including protective padding and guards, as well as medical protective equipment and apparel, and other uses, such as protective flooring, improved furniture cushioning, balls and tires for wheels, and other uses.

The device or flexible insert with siped compartments or chambers **510** include embodiments like two or more of either compartments **161** or chambers **188** or bladders (or a any mix including two or more of a compartment, a chamber, and a bladder) that are separated at least in part or in several parts or mostly or fully by an internal sipe **505**. The flexible insert **510** can be inserted during assembly of an article by a maker or manufacturer or is insertable by a user or wearer (into an article like a shoe, for example, as part of a removable midsole insert **145** described above), or integrated into the construction of a device as one or more components.

Siped compartments or chambers **510** include example embodiments such as FIGS. **1-15**, **17**, and **22-79** which generally show at least one inner compartment **161** or chamber **188** inside at least one other outer compartment **161** or chamber **161**; and the two compartments/chambers **161/188** being separated by an internal sipe **505**.

One practical example embodiment of the invention is any prior commercial embodiment of Nike Air™ gas bladder or compartment (like typical examples in FIGS. 12-16 of U.S. Pat. No. 6,846,534, which is hereby incorporated by reference) that is installed unattached, as is, located within the space enclosed partially or fully by a new, slightly larger outer compartment of one additional layer of the same or similar material, with the same or a simpler or the simplest geometric shape; that is, not necessarily following indentations or reverse curves, but rather incorporating straighter or the straightest lines, as seen in cross-section: for example, following the outermost side curvature seen in FIGS. **12-16**, but with upper and lower surfaces that are substantially flat and parallel (or curved and parallel), to facilitate ease of movement between the two surfaces of the sipe **505** formed, increasing the resulting flexibility.

The new additional, outer compartment thus thereby has created by its presence an internal sipe **505** between the two unconnected compartments. The new internal sipe **505** provides much greater flexibility to any footwear sole **22** or **28**, since it allows an inner, otherwise relatively rigid Nike Air™ compartment structure to become an inner compartment **501** (instead of typically being fixed into the other materials such as EVA of the footwear sole) to move freely inside the new outer compartment **500**, which becomes a new compartment that is fixed to the footwear sole, rather that the conventional Nike Air™ bladder. The flexibility improvement allows the shoe sole to deform under a body weight load like a wearer's bare foot sole, so that stability is improved also, especially lateral stability.

The result is that the conventional, inner Nike Air™ compartment—now contained by a new outer compartment—can move easily within the overall footwear sole, allowing the sole to bend or flex more easily in parallel with the wearer's bare foot sole to deform to flatten under a body weight load, including during locomotion or standing, so that footwear sole stability is improved also, especially lateral stability. The extent to which the inner Nike Air™ compartment is "free-floating" within the new outer compartment can be controlled

or tuned, for example, by one or more attachments (permanent or adjustable) to the outer compartment or by the media in the internal sipe.

The internal sipe **505** includes at least two surfaces that can move relative to each other to provide a flexibility increase for a footwear sole so that the shape of the footwear sole can deform under a body weight load to better parallel to the shape of the barefoot sole of a wearer under a same body weight load. The relative motion between the two internal sipe **505** surfaces increases the capability of the footwear sole to bend during locomotion under a wearer's body weight load to better parallel the shape of said wearer's bare foot sole.

In an analogous way, especially to the thicker heel portion of a typical shoe sole, a thick urban area telephone book has in effect hundreds of mostly "internal sipes", each page being in effect separated by a horizontal internal slit from each adjacent page, each of which thereby is able to move freely relative to each other, resulting in a flexible telephone book that bends quite easily, while at the same time relatively stable when a vertical force like body weight is applied.

In contrast, if the same wood fiber material with the same dimensions as a thick telephone book were formed instead into a single piece with no pages, like a solid particle board, it would be quite rigid.

If, instead, the sipes were rotated 90 degrees into vertical slits and open to the bottom, so that the spine of the telephone book is on top, those external sipes would also provide a substantial amount of flexibility, but at the cost of excessive instability when a vertical force like body weight is applied.

Also, the sliding motion between internal support surfaces within the shoe sole **28** allowed by internal sipe **505** in response to torsional or shear forces between a wearer's foot and the ground assists in controlling and absorbing the impact of those forces, whether sudden and excessive or chronically repetitive, thereby helping to protect the wearer's joints from acute or chronic injury, especially to the ankles, knees, hips, lower back, and spine.

A benefit of the siped compartments/chambers **510** is that, as a single unitary component, it can be used in any conventional manner in constructing the footwear sole **28**, generally like that used with a conventional single layer compartment such as used in Nike Air™; i.e. the outer surface of **510** can, as a useful embodiment, adhere to the adjacent materials like plastic such as PU (polyurethane) or EVA (ethyl vinyl acetate) or other plastic or rubber of the footwear sole that contact the **510** component, just as would be the case with the outer surface of existing single compartment **161** or chamber **188** of commercial examples of Nike Air™. However, the internal sipe **505** formed by the use of an inner compartment/chamber **501** in the siped compartment/chamber **510** provides flexibility in a footwear sole **28** that is absent in the relatively rigid footwear sole **28** formed with a conventional, single layer compartment **161** or chamber **188** of the many Nike Air™ commercial examples.

The sipe surfaces can in one useful example embodiment be formed by the inner surface (or part or parts of it) of the outer compartment **500** and the outer surface (or part or parts of it) of the inner compartment **501**. Such sipe surfaces can be substantially parallel and directly contact each other in one useful embodiment example, but the two surfaces are generally not attached to each other, so that the sipe surfaces can move relative to each other to facilitate a sliding motion between the two surfaces.

The sipe surfaces can be in other useful forms that allow portions of the surfaces to be proximate to each other in an unloaded condition, rather than contacting; such surfaces can make partial or full direct contact under a wearer's body weight load (which can vary from a fraction of a "g" to multiple "g" forces during locomotion) or remain somewhat separated; the amount of sipe surface area making direct contact can also vary with a wearer's body weight load. The sipes surfaces also may not be parallel or only partially parallel, such as the areas of direct surface contact or proximal surface contact.

To preclude the surfaces of the internal sipe **505** from directly contacting each other (whether loaded or unloaded), the sipe surfaces can include an internal sipe media **506** located between the surfaces to reduce friction by lubrication and increase relative motion and therefore flexibility. Useful example embodiments of the internal sipe media **506** include any useful material known in the art (or equivalent), such as a liquid like silicone as one example, a dry material like polytetrafluoroethylene as another example, or a gas like that used in Nike Air™ as a further example. The media **506** can be located in all of the sipe **505** or only part or parts, as shown in FIGS. **1-6**.

The media **506** can be used to decrease (or increase) sliding resistance between the inner surfaces of the sipe; for example, to lubricate with any suitable material known in the art. The internal sipe media **506** is an optional feature.

The siped compartments/chambers **510** can be located anywhere in the footwear sole or orthotic or upper and can be used in other applications, including non-footwear applications where flexibility increases are useful). The siped compartments/chambers **510** can be made, for example, with any methods and materials common in the footwear arts or similar arts or equivalents, like those in various Nike Air™; see for example U.S. Pat. Nos. 4,183,156 and 4,219,945 to Rudy (which show fluid-filled bladder manufacturing through a flat sheet bonding technique), U.S. Pat. No. 5,353,459 to Potter et al. (which shows fluid-filled bladders manufactured through a blow-molding process), as well as U.S. Pat. No. 6,837,951 and FIGS. 12-16 of U.S. Pat. No. 6,846,534, all of which patents are herein incorporated by reference) or similar commercial examples like Reebok DMX™ compartments in its original form, as seen for example U.S. Pat. No. 6,845,573 (herein incorporated by reference), column 5, line 41 to column 6, line 9), or New Balance N-ergy™ (see for example FIG. 1 of WIPO Pub. No. WO 00/70981 A1, but note that, as a example, at least the initial production versions of the N-erny compartment can have less rigidity to allow better flexibility) or Asics Gel™ (many versions) compartments or future equivalents of any, or with less common materials, such as fibers described above incorporated into or on the surface of the material of the siped compartment/chambers **510**, including either elastic fibers or inelastic fibers or a mix. The siped compartment/chambers **510** can be of any practical number in a footwear sole or any shape, of which useful example embodiments include regular geometric shapes or irregular shapes, including anthropomorphic or animal shapes; and the **510** number or shape can be symmetrical or asymmetrical, including between right and left footwear soles.

Either of the compartments **161** or chambers **188** of the siped compartment/chambers **510** (or **511** or **513**) can include one or more structural elements **502** like those common in the footwear art such as in Nike Air™ as noted in the above cited Rudy and Nike patents, also including Tuned Air™ (See for example U.S. Pat. No. 5,976,451 to Skaja et al, which is herein incorporated by reference and which shows manufacturing of fluid-filled bladders through a vacuum-forming process) or Zoom Air™ (See for example FIGS. 1-3 of U.S. App. No. 2005/0039346 A1, which is herein incorporated by reference); a number of example embodiments of inner com-

partments **501** with structural elements **502** are shown in the FIGS. **1**A, **9**, **13**, and **14**. The structural elements **502** can be made of any useful material known in the art and constructed in any manner known in the art. FIGS. **25**A and **26**A show similar example embodiments wherein the structural elements **502** of the inner compartment **501** are formed with a specific shape and foamed plastic material such as PU or EVA like that of Nike Shox™ (See U.S. Pat. Nos. 5,353,523, 5,343,639, and 6,851,204, which are herein incorporated by reference) and Nike Impax™ (U.S. D500,585 S, which is herein incorporated by reference), respectively, and can be affixed to the inner compartment **501**, which can be reinforced as necessary (instead of to rigid lower and/or upper plates); the lower surface of the outer compartment **500** can be attached to an outer sole, at least in part or an outer sole can be integrated into the outer compartment **500** by thickening, for example, or incorporating rubber or rubber substitute material. Other commercial existing examples that can be similarly modified as a device or flexible insert or component **510** (or **511** or **513**) are Adidas A^{3}™ Energy-Management Technology and Adidas™ Ground Control System (GPS)™, and Reebok DMX™ Shear Heel or other cushioning technologies.

Also, as shown in the example embodiments of FIGS. **26**B and **25**B, since foamed plastic material does not require containment (unlike a gas, liquid, or most gels), if the structural elements **502** are sufficiently interconnected, like for example Nike Impax™ in FIG. **26**B, or if the separate support columns **32** and midsole wedge **40** of Nike Shox™ are modified to interconnect like the example shown in FIG. **25**B, then those connected structural elements **502** can form an integral inner compartment **501**, the outer surface of which can form an internal sipe **505** with the new outer compartment **500**. The interconnection can be complete, with each structural elements **502** connected to at least the closest other elements **502**, as shown, or mostly complete, or partial. The Shox™ support columns **32** can be any practical number, such as existing examples of four or five or six (all commercially available) or more in the heel and many more in the forefoot of the shoe sole **22** or **28**, for a total of eleven in existing commercial examples.

Any of the compartments or chambers **161**/**188** of the siped compartment **510** can be permanently or temporarily attached one to another with at least one attachment **503** of any useful shape or size or number or position; embodiment examples are shown in FIGS. **1**A, **2**A, **3**A, **4**A, **5**A, **6**A, and **8**. Anthropomorphic designs would suggest including positioning attachments **503** on the internal sipe **505** closest to a wearer's foot sole as a useful embodiment, so that the remaining sipes **505** would have a U shape in cross-section, like the structure of human foot sole fat pads, which are analogous to the cushioning midsole and midsole components of footwear soles.

The attachments **503** can be simply passive (i.e. static) or actively controlled by electronic, mechanical, electromagnetic, or other useful means. The attachments **503** can, for example, be designed to break away as a failsafe feature to compensate for a predetermined extreme torsional load, for example, to reduce extreme stress on critical joints (in lieu of a wearer's cartilage, tendons, muscle, bone, or other body parts being damaged); the attachments **503** can then be reset or replaced (or, alternatively, return automatically upon relief of extreme stress to a normal position).

Example embodiments of the compartments and chambers **500**/**501** can include a media **504** such as a gas (like that used in Nike Air™ or ambient atmospheric air), a liquid or fluid, a gel, a foam (made of a plastic like PU or EVA, both of which are common in the footwear art, or equivalent, or of a rubber (natural or synthetic) or blown rubber or a rubber compound or equivalent or of another useful material or of a combination of two or more of the preceding foam plastic/rubber/etc.) or a useful combination of one or more gas, liquid, gel, foam, or other useful material.

Also, any inventive combination that is not explicitly described above in the example shown in FIG. **1** is implicit in the overall invention of this application and, consequently, any part of the example embodiments shown in preceding FIG. **1** and/or associated textual specification can be combined with any other part of any one or more other elements of the invention or prior art examples described in FIGS. **2**-**79** and/or associated textual specification and/or, in addition, can be combined to make new and useful improvements over the existing art with any one or more other elements of the inventive or prior art examples shown in FIGS. 1-75 of both the applicant's prior footwear U.S. application Ser. No. 11/190,087, published as Pub. No. 2005/0268487 A1 on Dec. 8, 2005, and the applicant's prior orthotic U.S. Pat. No. 7,010,869, issued Mar. 14, 2006, as well as continuation U.S. application Ser. No. 11/108,034, published as Pub. No. 2005/0217142 A1 on Oct. 6, 2005, each of which is incorporated by reference herein for completeness of disclosure, as well as U.S. application Ser. No. 11/282,665 published as Publication No. US 2006/0248749 A1, on Nov. 9, 2006, which is also hereby explicitly incorporated by reference herein in its entirety for completeness of disclosure, as including additional FIGS. **76**-**80**, **81**A-**81**D and **82**A-**82**C, any part or parts of which figure or figures can be combined with any part or parts of any figure or figures of this application. In addition, any one or more features or components of FIG. **1** and FIGS. **2**-**79** can be usefully combined with one or more features or components of FIGS. 1-43 of the applicant's earlier application Ser. No. 11/179,887 published as Publication No. US 2005/0241183 A1 on Nov. 3, 2005 describing footwear, which application is hereby incorporated by reference herein.

FIGS. **2**A, **3**A, and **4**A show examples of embodiments of siped compartment/chamber/bladders **510** wherein either the inner compartment/chamber/bladder **501** or the outer compartment **500** can have one or more openings, for pressure equalization, assembly facilitation, or other purposes.

Also, any inventive combination that is not explicitly described above in the example shown in FIG. **2**-**4** is implicit in the overall invention of this application and, consequently, any part of the example embodiments shown in preceding FIG. **2**-**4** and/or associated textual specification can be combined with any other part of any one or more other elements of each other or the invention examples described in FIGS. **1** and **5**-**79** and/or associated textual specification, in addition, can be combined to make new and useful improvements over the existing art with any one or more other elements of each other or the inventive or prior art examples shown in prior published FIGS. 1-75 of the '869 Patent and the '087, '034 and '665 Applications, as well as additional FIGS. 76-80, 81A-81D and 82A-82C of the '665 Application, and also added FIGS. 1-43 of the '887 Application.

FIG. **5**A shows an example embodiment with an inner compartment/chamber/bladder $\mathbf{501}^{1}$ having a smaller inner compartment/chamber/bladder $\mathbf{501}^{2}$; additional smaller inner compartments **501** are possible in a similar progression, either enclosed within the previous larger inner compartment **501** or within the same **501** or **500**.

FIG. **6**A shows an example embodiment with two inner compartment/chamber/bladders $\mathbf{501}^{1}$ and $\mathbf{501}^{2}$ which are layered within outer compartment/chamber/bladder **500**; additional compartment/chamber **501** layers can be useful also.

FIGS. **1**B, **2**B, **3**B, **4**B, **5**B and **6**B show a top view of an example embodiment of the device **510** in a horizontal plane of FIGS. **1**A, **2**A, **3**A, **4**A, **5**A, and **6**A.

FIG. **1**C is an exploded perspective view showing the relationship of an insert device **510**, which has a siped compartment or chamber or bladder, with a midsole **148**, bottom sole **149**, and upper **21** of a shoe or any other footwear. The midsole **148** and bottom sole **149** (and any additional layers not shown) together form a shoe sole which can be any footwear sole, including any conventional sole **22** or any sole **28** according to one of the applicant's patents or applications. In the simple example shown, the device **510** can be inserted during a conventional manufacturing or assembly process or by a footwear wearer and can be located anywhere in the footwear sole and/or upper.

Also, any inventive combination that is not explicitly described above in the example shown in FIGS. **5-6** is implicit in the overall invention of this application and, consequently, any part of the example embodiments shown in preceding FIG. **5-6** and/or associated textual specification can be combined with any other part of any one or more other elements of the invention examples described in FIGS. **7-79** and/or associated textual specification and/or, in addition, can be combined to make new and useful improvements over the existing art with any one or more other elements of each other or the inventive or prior art examples shown in prior published FIGS. 1-75 of the '869 Patent and the '087, '034 and '665 Applications, as well as additional FIGS. 76-80, 81A-81D and 82A-82C of the '665 Application, and also added FIGS. 1-43 of the '887 Application.

FIGS. **7-15** and **17** show, in frontal plane cross sections in the heel area, example footwear embodiments with siped compartment/chambers **510** located in footwear soles **28**, which are shown with curved sides but which sides can also be planar in another embodiment; or which is shown with flattened inner and outer surfaces underneath the wearer's foot sole but which can be curved in a different embodiment.

FIG. **7** shows an example embodiment with single outer compartment **500** and a single inner compartment/chamber/bladder **501**.

FIG. **8** shows a similar example embodiment with an attachment **503** between **500** and **501**.

FIG. **9** is a similar example embodiment to that shown in FIG. **7** and includes also an inner compartment/chamber/bladder **501** with a number of structural elements **502**.

FIG. **10** shows an example embodiment with more than one siped compartment/chambers **510**, including outer compartment/chamber/bladders **500**, each with an inner compartment/chamber/bladder **501**; not shown is another example embodiment with more than one inner compartments/chamber/bladders **501** in each of more than one outer compartment/chamber/bladder **500**, another among many useful variations.

Also, any inventive combination that is not explicitly described above in the examples shown in FIGS. **8-10** is implicit in the overall invention of this application and, consequently, any part of the example embodiments shown in preceding FIGS. **8-10** and/or associated textual specification can be combined with any other part of any one or more other elements of each other or the invention or prior art examples described in FIGS. **1-7** and **11-79** and/or associated textual specification and/or, in addition, can be combined to make new and useful improvements over the existing art with any one or more other elements of each other or the inventive or prior art examples shown in prior published FIGS. 1-75 of the '869 Patent and the '087, '034 and '665 Applications, as well as additional FIGS. 76-80, 81A-81D and 82A-82C of the '665 Application, and also added FIGS. 1-43 of the '887 Application.

FIG. **11** shows a similar example embodiment to FIG. **7** and including a number of inner compartment/chamber/bladders **501** within a single outer compartment/chamber/bladder **500**, as does FIG. **12**. Any practical number of inner compartment/chamber/bladders **501** can be a useful embodiment of the general invention.

Also, any inventive combination that is not explicitly described above in the examples shown in FIGS. **7** and **11-12** is implicit in the overall invention of this application and, consequently, any part of the example embodiments shown in preceding FIGS. **7** and **11-12** and/or associated textual specification can be combined with any other part of any one or more other elements of each other or the invention or prior art examples described in FIGS. **1-6**, **8-10**, and **13-79** and/or associated textual specification and/or, in addition, can be combined usefully with any one or more other elements of each other or the inventive or prior art examples shown in prior published FIGS. 1-75 of the '869 Patent and the '087, '034 and '665 Applications, as well as additional FIGS. 76-80, 81A-81D and 82A-82C of the '665 Application, and also added FIGS. 1-43 of the '887 Application.

FIGS. **13** and **14** show example embodiments wherein the outer compartment/chamber/bladder **500** forms substantially all of the footwear sole, exclusive of the outer sole **149** in the example shown (but the insert **510** can form the outer surface of the footwear sole also). A heel cross-section is shown, but other sections of the sole, such as the forefoot or midfoot can employ this approach, either as separate components or each can be used alone or in combination with others or as substantially all of the sole **28**. As shown, both FIGS. **13** and **14** example embodiments include multiple inner compartment/chamber/bladders **501** in layers.

Also, any inventive combination that is not explicitly described above in the examples shown in FIGS. **13-14** is implicit in the overall invention of this application and, consequently, any part of the example embodiments shown in preceding FIG. **13-14** and/or associated textual specification can be combined with any other part of any one or more other elements of each other or the invention or prior art examples described in FIGS. **1-12** and **15-79** and/or associated textual specification and/or, in addition, can be combined usefully with any one or more other elements of each other or the inventive or prior art examples shown in prior published FIGS. 1-75 of the '869 Patent and the '087, '034 and '665 Applications, as well as additional FIGS. 76-80, 81A-81D and 82A-82C of the '665 Application, and also added FIGS. 1-43 of the '887 Application.

Also, any inventive combination that is not explicitly described above in the example shown in FIG. **15** is implicit in the overall invention of this application and, consequently, any part of the example embodiments shown in preceding FIG. **15** and/or associated textual specification can be combined with any other part of any one or more other elements of the invention examples described in FIGS. **1-14** and **16-79** and/or associated textual specification and/or, in addition, can be combined with any one or more other elements of the inventive or prior art examples shown in prior published FIGS. 1-75 of the '869 Patent and the '087, '034 and '665 Applications, as well as additional FIGS. 76-80, 81A-81D and 82A-82C of the '665 Application, and also added FIGS. 1-43 of the '887 Application.

FIG. **16** shows an example embodiment of chambers **188** for any footwear soles, including conventional, or other flexibility uses with an electromagnetic shock absorption system

similar to, for example, the Cadillac™ "Magnetic Ride Control" system, wherein magnetically sensitive metal particles **507** suspended in a shock absorbing fluid **508** are made less fluid in effect by controlling, on for example a millisecond basis, an electromagnetic field-creating circuit **509** that aligns the metal particles **507** into a flow resistant structure. The fluid **508** is thus a magnetorheological fluid, that is, a fluid which generally solidifies into a pasty consistency when subject to a magnetic field.

FIG. **17**A shows an example embodiment like FIG. 11N of applicant's incorporated published '087, '034 and '665 Applications and '869 Patent wherein the flow between chambers **188** is controlled by controlling the flow resistance of the fluid **508** by the circuit **509** located to affect the fluid **508** in one or more of the chambers **188**; alternatively, the flow can be controlled by the circuit **509** being located between the chambers.

FIG. **17**A shows a similar embodiment and view to that shown in FIG. **15**, but including an electromagnetic shock absorption system. FIG. **17**B is a close-up view of an embodiment like FIG. **7**, but showing magnetorheological fluid **508** located within an internal sipe **505**.

The FIG. **16-17** example embodiments can be located anywhere in the footwear sole (and can be used in other applications, including non-footwear applications where flexibility increases are useful). The FIG. **16-17** embodiments can be made with any materials common in the footwear art, like those in various Nike Air™ commercial examples, or future equivalents, or with less common materials, such as fibers described earlier, including either elastic fibers or inelastic fibers or a mix. The FIG. **16-17** example embodiments can be of any practical number in a footwear sole, or any shape, of which useful embodiments include regular geometric shapes or irregular shapes, including anthropomorphic shapes; and the number or shape can be symmetrical or asymmetrical, including between right and left footwear soles.

Also, any inventive combination that is not explicitly described above in the examples shown in FIGS. **16-17** is implicit in the overall invention of this application and, consequently, any part of the example embodiments shown in preceding FIG. **16-17** and/or associated textual specification can be combined with any other part of any one or more other elements of each other or the invention or prior art examples described in FIGS. **1-15** and **18-79** and/or associated textual specification and/or, in addition, can be combined with any one or more other elements of each other or the inventive or prior art examples shown in prior published FIGS. 1-75 of the '869 Patent and the '087, '034 and '665 Applications, as well as additional FIGS. 76-80, 81A-81D and 82A-82C of the '665 Application, and also added FIGS. 1-43 of the '887 Application.

FIG. **18** shows an example embodiment of a flexible insert or component **511** including a single compartment/chamber **161**/**188** or bladder with an associated internal sipe **505** component, again for any footwear sole, including conventional **22**, or other flexibility uses (such as those described above relative to insert **510**), to form a single unitary siped compartment or chamber; the sipe **505** can extend to part or all of one side of the single compartment **500**, as shown, or the sipe **505** can extend around portions of the other sides of the single compartment/chamber/bladder **500**; FIG. **18**B shows an example embodiment in a horizontal plane view of **511**. The flexible insert **511** can be inserted during assembly of an article by a maker or manufacturer or is insertable by a user or wearer (into an article like a shoe, for example, as part of a removable midsole insert described above), or integrated into the construction of an article as one or more components.

A benefit of the single siped compartment/chamber/bladder **511** is that, as a single unitary component like **510**, it can be used in a conventional manner in constructing the footwear sole **28**, like that used with a conventional single layer compartment in Nike Air™; i.e. the outer surface of **511** can, as a useful embodiment, adhere to the adjacent material of the footwear sole that contact the **511** component, just as would the outer surface of a single compartment **161** or chamber **188**. However, the internal sipe **505** component of the siped compartment/chamber/bladder **511** provides flexibility in a footwear sole **28** that is absent in the relatively rigid footwear sole **28** formed with a conventional, single layer compartment **161** or chamber **188**.

The siped compartments/chamber/bladder **511** can be located anywhere in the footwear sole (and can be used in other, non-footwear applications where flexibility increases are useful). The siped compartment/chamber/bladders **511** can be made with any materials common in the footwear art, like those in various Nike Air™ commercial examples, or future equivalents, or with less common materials, such as fibers described earlier, including either elastic fibers or inelastic fibers or a mix. The siped compartment/chamber/bladders **511** can be of any practical number in a footwear sole, or any shape, of which useful embodiments include regular geometric shapes or irregular shapes, including anthropomorphic shapes; and the number or shape can be symmetrical or asymmetrical, including between right and left footwear soles.

FIG. **18**C is an exploded perspective view showing the relationship of an insert device **511**, which has a compartment or chamber or bladder and an internal sipe, with a midsole **148**, bottom sole **149**, and upper **21** of a shoe or any other footwear. The midsole **148** and bottom sole **149** (and any additional midsole or other layers not shown) together form a shoe sole which can be any footwear sole, including any conventional sole **22** or any sole **28** according to one of the applicant's patents or applications. In the simple example shown, the device **511** can be inserted during a conventional manufacturing or assembly process or by a footwear wearer and can be located anywhere in the footwear sole and/or upper.

Also, any inventive combination that is not explicitly described above in the example shown in FIG. **18** is implicit in the overall invention of this application and, consequently, any part of the example embodiments shown in preceding FIG. **18** and/or associated textual specification can be combined with any other part of any one or more other elements of the invention examples described in FIGS. **1-17** and **19-79** and/or associated textual specification and/or, in addition, can be combined usefully with any one or more other elements of each other or the inventive or prior art examples shown prior published FIGS. 1-75 of the '869 Patent and the '087, '034 and '665 Applications, as well as additional FIGS. 76-80, 81A-81D and 82A-82C of the '665 Application, and also added FIGS. 1-43 of the '887 Application.

FIG. **19**A shows an example embodiment of a flexible insert or component **513** forming a unitary internal sipe for any footwear sole or orthotic or upper, including conventional sole **22**, or other flexibility uses (such as those described above relative to insert **510**), the embodiment shown employing a single internal flexibility sipe **505** in the form of a slit; FIG. **19**B shows an example embodiment in a horizontal plane view of FIGS. **19**A, **20**A, and **21**A. Multiple unitary internal sipes **513** can be used independently or synergistically anywhere in a footwear sole in other useful embodiments not shown; the sipes **513** can be stacked proximate to one another or apart, as viewed in a frontal or sagittal plane,

for example; or the sipes **513** can overlap, as viewed in a horizontal plane, for example. The flexible insert **513** can be inserted during assembly of an article by a maker or manufacturer or is insertable by a user or wearer (into an article like a shoe, for example, as part of a removable midsole insert described above), or integrated into the construction of an article as one or more components.

In one useful example embodiment, the unitary internal sipe **513** can be made as a separate sole component like an extremely thin conventional gas compartment similar to a Nike Air™ compartment, but without the typical internal compartment structures (which in another useful embodiment can be present in some form if unattached to at least one inner surface so that relative motion between inner surfaces can occur to provide increased flexibility).

A benefit of the unitary internal sipe **513** is that, as a single insertable unitary component like **510** and **511**, it can be used in a conventional manner in constructing the footwear sole **28**, roughly like that used with a conventional single layer compartment in Nike Air™; i.e. the outer surface of **513** can, as a useful embodiment, adhere to the other portions of the footwear sole that contact the **513** component, just as would the outer surface of a single compartment **161** or chamber **188**.

The unitary internal sipe **513** can be located as a separate component anywhere in the footwear sole (and can be used in other applications, including non-footwear applications where flexibility increases are useful). The insertable unitary internal sipe **513** can be made with any materials common in the footwear art, like those in various Nike Air™ commercial examples, or future equivalents, or with less common materials, such as fibers described earlier, including either elastic fibers or inelastic fibers or a mix. The unitary internal sipe **513** can be of any practical number in a footwear sole, or any shape, of which useful example embodiments include regular geometric shapes or irregular shapes, including anthropomorphic shapes; and the number or shape can be symmetrical or asymmetrical, including between right and left footwear soles.

FIG. **19**C is an exploded perspective view showing the relationship of an insert device **513**, which can be a thin compartment or chamber or bladder forming an internal sipe such as a slit, with a midsole **148**, bottom sole **149**, and upper **21** of a shoe or any other footwear. The midsole **148** and bottom sole **149** (and any additional midsole or other layers not shown) together form a shoe sole which can be any footwear sole, including any conventional sole **22** or any sole **28** according to one of the applicant's patents or applications. In the simple example shown, the device **513** can be inserted during a conventional manufacturing or assembly process or by a footwear wearer and can be located anywhere in the footwear sole and/or upper.

FIG. **20**A shows the FIG. **19**A example embodiment of a unitary internal sipe **513** positioned as a separate component in an embodiment of a footwear sole **28**; alternatively, in another example embodiment not shown, the unitary internal sipe **513** can be completely enclosed in conventional midsole material like PU or EVA or similar material.

FIG. **20**C shows a frontal plane cross section of an insert device **513** as a thin compartment or chamber or bladder **501** (or walls **512**) forming an internal sipe **505** such as a slit that is located in any footwear sole, including any conventional sole **22** or any sole **28** according to one of the applicant's patents or applications; the sole example shown is a single piece, but can include any number of layers (including for example multiple midsole or other layers), at least including a midsole **148** and outsole **149**.

FIG. **21**A shows the unitary internal sipe **513** in an example embodiment including three separate internal flexibility sipes **505**, which in one embodiment can be completely enclosed in conventional midsole material such as PU or EVA or similar material. Generally, unitary internal sipes **513** can thus be subdivided into any practical number of smaller unitary internal sipes that are aggregated together (or can be positioned alone, as described earlier).

Also, any inventive combination that is not explicitly described above in the examples shown in FIGS. **19-20** is implicit in the overall invention of this application and, consequently, any part of the example embodiments shown in preceding FIGS. **19-20** and/or associated textual specification can be combined with any other part of any one or more other elements of each other or the invention or prior art examples described in FIGS. **1-18** and **21-79** and/or associated textual specification and/or, in addition, can be combined usefully with any one or more other elements of each other or the inventive or prior art examples shown in prior published FIGS. 1-75 of the '869 Patent and the '087, '034 and '665 Applications, as well as additional FIGS. 76-80, 81A-81D and 82A-82C of the '665 Application, and also added FIGS. 1-43 of the '887 Application.

FIG. **22** shows an example embodiment of a flexible insert or component **510** with siped compartment/chamber/bladders used in the footwear upper **21** for use in embodiments like the Reebok Pump™ and Pump 2.0™; the flexible insert or component **510** can be positioned anywhere in upper **21**, including an orthotic; **511** and **513** can be used also.

FIG. **23** shows an example embodiment of a flexible insert or component **510** that is substantially forming the footwear upper **21** in part of the heel and which can be used anywhere else are in all of the upper **21**. Note also that the flexible insert or component **510** shown as an example in FIG. **23** also shows the flexible insert or component **510** positions so that it is located in both the upper **21** and in the shoe sole or in both an orthotic and orthotic upper; **511** and **513** can be used also.

Also, any inventive combination that is not explicitly described above in the examples shown in FIGS. **22-23** is implicit in the overall invention of this application and, consequently, any part of the example embodiments shown in preceding FIGS. **22-23** and/or associated textual specification can be combined with any other part of any one or more other elements of each other or the invention or prior art examples described in FIGS. **1-21** and **24-79** and/or associated textual specification and/or, in addition, can be combined usefully with any one or more other elements of each other or the inventive or prior art examples shown in prior published FIGS. 1-75 of the '869 Patent and the '087, '034 and '665 Applications, as well as additional FIGS. 76-80, 81A-81D and 82A-82C of the '665 Application, and also added FIGS. 1-43 of the '887 Application.

FIGS. **24**A and **24**B show, in frontal plane cross section, two example embodiments of any helmet **550** for any use with a cushioning helmet liner **551** including an inner flexible insert or component **510**; any useful number of flexible inserts or components **510** can be used; flexible insert or components **511** and **513** can be used also. The invention includes any helmet **550** (or part or parts of the helmet) with a liner **551** with one or more internal sipes **505** of any form previously described in this application and any material known in the art located anywhere between the outer surface and inner surface of the helmet liner **551**.

The helmet **550** includes any helmet **550** (or part or parts of the helmet) with one or more internal sipes **505** of any shape or material located anywhere between the outer surface and the inner surface of the helmet **550**. Helmet **550** itself can be

formed as a structure incorporating one or more sipes **505**, including as a **510**, **511**, or **513** structure; that is, helmet **550** shown in FIG. **24**A can be in the form of the **510** structure shown in FIG. **24**A, for example, made of any helmet material known in the art (both hard or soft or, for example, hard on outer layer or **500** and soft on inner layer or **500** (outer compartment). Another example of helmet **550** is with the **513** structure of sipe only (shown in FIG. **24**D). Internal sipe **505*** shown as an example is an internal slit.

FIGS. **24**C and **24**D show, in frontal plane cross section, two example embodiments of any helmet **550** for any use including one or more internal sipes **505** of any form previously described in this application and any material known in the art located anywhere between the outer surface and inner surface of the helmet **550**, and can include, for example, a shock and shear-absorbing media **504** as previously described in this application.

FIGS. **24**E-**24**F show, in frontal plane cross section, exemplary embodiments of a helmet **550** and helmet liner **551** that comprises an inner compartment/chamber/bladder **501** having structural elements **502**, attachments **503** and openings. FIG. **24**G shows, in frontal plane cross section, an embodiment of a helmet **550** and helmet liner **551** that comprises an inner compartment/chamber/bladder **501** having at least one layer of foamed or non-foamed plastic material and/or blown or non-blown rubber material, optionally with fiber **518**.

Also, any inventive combination that is not explicitly described above in the examples shown in FIGS. **24**A-**24**D is implicit in the overall invention of this application and, consequently, any part of the example embodiments shown in preceding FIGS. **24**A-**24**D and/or associated textual specification can be combined with any other part of any one or more other elements of each other or the invention or prior art examples described in FIGS. **1-23** and **25-79** and/or associated textual specification and/or, in addition, can be combined usefully with any one or more other elements of each other or the inventive or prior art examples shown in prior published FIGS. 1-75 of the '869 Patent and the '087, '034 and '665 Applications, as well as additional FIGS. 76-80, 81A-81D and 82A-82C of the '665 Application, and also added FIGS. 1-43 of the '887 Application.

Also, any inventive combination that is not explicitly described above in the example shown in FIG. **24** is implicit in the overall invention of this application and, consequently, any part of the example embodiments shown in preceding FIG. **24** and/or associated textual specification can be combined with any other part of any one or more other elements of the invention or prior art examples described in FIGS. **1-23** and **25-79** and/or associated textual specification and/or, in addition, can be combined usefully with any one or more other elements of the inventive or prior art examples shown in prior published FIGS. 1-75 of the '869 Patent and the '087, '034 and '665 Applications, as well as additional FIGS. 76-80, 81A-81D and 82A-82C of the '665 Application, and also added FIGS. 1-43 of the '887 Application.

FIGS. **25**A and **25**B, as well as FIGS. **26**A and **26**B, show a heel section of a footwear sole or orthotic with an example of a flexible insert or component **510** using specific examples of the structural elements **502** based on commercial examples of Nike Shox™ and Nike Impax™. FIGS. **25**A and **26**A show an example of those structural elements of foam material contained and affixed within an inner compartment **501**. Since use of a foamed material as a media does not require containment to maintain its structure and function (in contrast to a gas, liquid, or most gels), a foamed material do not require a separate inner compartment **501** in order to form an internal sipe **505** with the new outer compartment **500**, as noted under the section on compartment **500**/**501** media **504** below; thus, as shown in the examples of FIGS. **25**B and **26**B, suitably configured (in terms of interconnections and shape, for example) structural elements **502** of a foamed material can form an integral inner compartment **501** creating an internal sipe **505** with outer compartment **500**.

FIG. **26**C shows an example in a horizontal plane cross-section of a footwear sole **22** of a device or flexible insert or component **510** in which the inner compartment **501** includes a flexible shank **514** located in the media **504** in the general area of the instep of the shoe sole between the heel area and the forefoot area. The flexible shank **514** can be made of any rigid or semi-rigid material including plastic, metal, and composites including carbon-fiber common in the art and can have sipes **151**, of which a vertical slit is one example among a very many well known in the art, that are generally oriented from the area of the heel to the area of the forefoot (including at an angle) so that the shoe sole **22** is flexible enough to flatten in following the deformation motion of a wearer's foot sole in a full range of pronation and supination motion, while remaining sufficiently rigid to support naturally the instep area of the shoe sole **22**, a area that is relatively thin (often with tapered thickness) and therefore not ground-contacting in many common footwear soles popular in the art and therefore unstable without shank support, which is well known in the art but which is typically too narrow to support directly the base of a wearer's fifth metatarsal and too rigid in a frontal plane to follow a wearer's lateral pronation/supination motion.

FIG. **26**D shows two different examples of versions of the flexible shank **514** in frontal plane cross section. The upper version shows on the left side vertical sipes **151** as slits that penetrate the shank fully and which can be held together, especially during assembly, by an attached fiber (or other material, like foam, for example) layer, while on the right side is another variation of sipes (among the vast number of possibilities discussed in the applicant's prior patents), which are slits **151'** that do not fully penetrate the flexible shank **514**. The lower version shows an example of inverted V shaped channels as another sipe variation, with the left side showing full or near full penetration (and again, a fiber or other layer can be attached) and the right side showing the channels connected by portions of the flexible shank **514**.

Also, any inventive combination that is not explicitly described above in the example shown in FIGS. **25**A-**25**B and **26**A-**26**D is implicit in the overall invention of this application and, consequently, any part of the example embodiments shown in preceding FIGS. **25**A-**25**B and **26**A-**26**D and/or associated textual specification can be combined with any other part of any one or more other elements of each other or the invention or prior art examples described in FIGS. **1-24** and **27-79** and/or associated textual specification and/or, in addition, can be combined usefully with any one or more other elements of each other or the inventive or prior art examples shown in prior published FIGS. 1-75 of the '869 Patent and the '087, '034 and '665 Applications, as well as additional FIGS. 76-80, 81A-81D and 82A-82C of the '665 Application, and also added FIGS. 1-43 of the '887 Application.

FIGS. **27**A-**27**B shows in cross-section an example of any ball **530** with one or more internal sipes **505** of any shape located between the outer surface of the ball and an inner surface. The ball includes a structure like the device or flexible insert **510** above, with an inner compartment/chamber/bladder **501** in a typical example having a media **504**, which can be pressured gas like air that is sealed (like a tennis ball) or controlled by a valve (not shown) common in the commer-

cial art, like a basketball, and with an outer compartment/chamber/bladder **500**. Alternatively, the ball can be structured like a typical golf ball with a solid or relatively solid core (with one or more layers of material) as media **504**, which would be separated from the tough outer layer by an internal sipe **505**, which can be made to reduce the uncontrolled spin of an offcenter shot like a slice or hook, since any spin imparted to the compartments at the instant of club contact with the ball would become relatively disconnected after contact, with the outer compartment encountering air resistance to its spin, while the core of the inner compartment **501** would encounter friction from the internal sipe **505** surfaces. A similar design and construction approach involving and internal sipe **505** can be used with other devices like skis, bats, tool handles.

Also, any inventive combination that is not explicitly described above in the example shown in FIGS. **27**A-**27**B is implicit in the overall invention of this application and, consequently, any part of the example embodiments shown in preceding FIGS. **27**A-**27**B and/or associated textual specification can be combined with any other part of any one or more other elements of the invention or prior art examples described in FIGS. **1**-**26** and **28**-**79** and/or associated textual specification and/or, in addition, can be combined usefully with any one or more other elements of the inventive or prior art examples shown in prior published FIGS. 1-75 of the '869 Patent and the '087, '034 and '665 Applications, as well as additional FIGS. 76-80, 81A-81D and 82A-82C of the '665 Application, and also added FIGS. 1-43 of the '887 Application.

FIG. **28**A shows in cross-section an example of a tire **535**, such as for a wheel of a transportation vehicle, with a device **510**; the internal sipe **505** and/or inner compartment/chamber/bladder **501** can be pressured or not (valve not shown). As shown in the example, inner compartment/chamber/bladder **501** can have one or more direct attachments **503** to the wheel and the structural elements shown can be made of any useful material as is conventional in the art, including plastic and/or plastic composite and/or carbon fiber. The outer compartment/chamber/bladder **500** can be abbreviated to cover only part of inner compartment/chamber/bladder **501**, as shown in FIG. **28**, (possibly pressure-sealed to the wheel like a conventional automobile tire and wheel); the outer compartment/chamber/bladder **500** can also be abbreviated further to cover only a lesser portion, including at least a tread portion, which can include rubber (natural or synthetic, as can other or all parts of the outer compartment **500**. FIG. **28**B shows in a side view cross-section an example of shape of structural elements **502** of the inner compartment **501** (not shown for simplicity).

Also, any inventive combination that is not explicitly described above in the example shown in FIG. **28** is implicit in the overall invention of this application and, consequently, any part of the example embodiments shown in preceding FIG. **28** and/or associated textual specification can be combined with any other part of any one or more other elements of the invention or prior art examples described in FIGS. **1**-**27** and **29**-**79** and/or associated textual specification and/or, in addition, can be combined usefully with any one or more other elements of each other or the inventive or prior art examples shown in prior published FIGS. 1-75 of the '869 Patent and the '087, '034 and '665 Applications, as well as additional FIGS. 76-80, 81A-81D and 82A-82C of the '665 Application, and also added FIGS. 1-43 of the '887 Application.

FIG. **29**A shows, in sagittal plane cross sections, two examples of prior art human breast implants, the first inserted over pectoral muscle and the second inserted under pectoral muscle. FIG. **29**B shows an example of a human breast implant **540** with a siped compartment/chamber/bladder **510** in any of the forms described earlier in this application. The breast implant **540** can be located like either of the prior art examples in FIG. **29**A or in another position, or, alternatively, can be incorporated in a pad worn externally to the wearer's body. Similar implants or prosthetic devices **540** incorporating a siped compartment/chamber/bladder **510** including of anatomical or anatomically compatible shape can be used anywhere else in or on the human body, or in or on the body of an animal or other biological entity, utilizing any material in the known implant or other art, including new equivalents, for both functional and/or cosmetic purposes, including external use. More generally, the implant or prosthetic device **540** can be any pad incorporating one or more internal sipes **505** of any **510**/**511**/**513** form described earlier in this application located anywhere within the implant **540** (or connecting to the outer surface of **500**) In one example embodiment, the media **504** contained by the inner compartment **501** can be a material like silicone, the media **504** contained by the inner compartment **501** can be a material like silicone, while the sipe area **505** can contain a material like water.

FIGS. **30**A-**30**D show cross sectional examples of any structural or support element **550** in any device, including mechanical, electro-mechanical, architectural, electronic, optical, or biological, including a beam or strut, or a tool or racquet handle or grip, shaft or body, or head, that incorporates a siped compartment/chamber/bladder **510** of any form described earlier in this application located anywhere within the structural or support element **550**. More generally, the structural or support element **550** can be element incorporating one or more internal sipes **505** of any **510**/**511**/**513** form described earlier in this application located anywhere within the structural or support element **550** (or connecting to the outer surface of **500**). The sipe or sipes **505** can include one or more sipe media **506** (or **508**) they can lubricate the sipe so that **510**/**511**/**513** can recoil or rebound after a force impact or load with better flexibility, which can be tuned.

The sipe or sipes **505** can use active configuration or control, as shown in FIG. **17**B.

FIGS. **30**E-**30**J show cross sectional views perpendicular to the long axis cross-sections shown in FIGS. **30**A-D. FIGS. **30**E-**30**F are example cross sections of the example embodiment shown in FIG. **30**C; FIGS. **30**G-**30**H are example cross-sections of the example embodiments shown in FIGS. **30**A and **30**B; and FIGS. **30**I-**30**J are example cross sections of the example embodiment shown in FIG. **30**D. Numeral **8** shows attachment sections that can be glued, for example, to assemble the **510**/**511513** inventions from component parts.

The examples shown would typically be made from relatively rigid materials for the example embodiments listed above; but, for example, the same structure can be used describe different embodiments, such as FIG. **30**F can show a cross section of a relatively rigid tool handle at numeral **504** surrounded by a **510** embodiment with relatively softer materials for the bladder or compartment or chamber **500** and **501**.

FIG. **31**A shows examples of prior art golf clubs. FIG. **31**B shows an example of a golf (or other) club head or racket (or tool head or body or handle/grip) **550** with one or more internal sipes **505** of any **510**/**511**/**512** form described previously in this application located anywhere within said club **550** (or connecting to the outer surface of **500**).

FIG. **32**A shows an example of a prior art artificial spinal or intervertebral disk. FIG. **32**B shows an example of an artificial spinal or intervertebral disk **560**, including any artificial joint disk or any other surgical or prosthetic device for human or animal with one or more internal sipes **505** of any **510**/**511**/

513 form previously described within this application located anywhere within the outer surface of disk **560** (or connecting to the outer surface of **500**). The artificial disk **560** can be located between endplates **561**, as in the example shown in FIG. **32**B.

FIGS. **33**A-**33**E and **34-35** show examples of shoe soles **22** or **28** or midsole insert or orthotics **145** with several planar sides to approximate curvature from the applicant's WIPO publication No. WO 02,09547, which can be combined with the flexible insert or components **510**, **511**, or **513**, including with the examples shown in FIGS. **1-32** and **36-79**.

Also, any inventive combination that is not explicitly described above in the example shown in FIGS. **29-35** is implicit in the overall invention of this application and, consequently, any part of the example embodiments shown in preceding FIG. **29-35** and/or associated textual specification can be combined with any other part of any one or more other elements of each other or the invention or prior art examples described in FIGS. **1-28** and **36-79** and/or associated textual specification and/or, in addition, can be combined usefully with any one or more other elements of each other or the inventive or prior art examples shown in prior published FIGS. 1-75 of the '869 Patent and the '087, '034 and '665 Applications, as well as additional FIGS. 76-80, 81A-81D and 82A-82C of the '665 Application, and also added FIGS. 1-43 of the '887 Application.

FIG. **36** shows background information from the automotive industry relating to FIGS. **98** and **99**.

FIGS. **37-43** show prior art examples gas bladders of Nike Air™ (**119-123**), which are FIGS. 12-16 of U.S. Pat. No. 6,846,534 and Zoom Air™ (**124-126**), which are FIGS. 1-3 of published U.S. Patent Application 2005/0039346 A1.

FIG. **44** shows Adidas 1 shoe sole electronic or electromechanical cushioning system (pg. 96 Popular Science, December 2004).

Reference numeral **28** refers to the applicant's footwear sole inventions in this and prior footwear/orthotic applications and patents, but reference numeral **28** also refers to orthotics and/or corrective footwear in this application, as well as in the applicant's prior footwear applications and patents that are incorporated by reference herein. This is because footwear soles **28** themselves can be custom modified in a manner conventional to the orthotic and/or corrective shoe art with individualized correction made to the footwear sole **28** as if the entire sole **28** were an orthotic device, rather than just to an orthotic insert **145**; potentially included are differing corrections between right and left footwear soles **28** as necessary, as is conventional in the orthotic/corrective shoe art.

Reference numeral **148** refers to midsole, a middle sole layer between the bottom sole and the shoe upper; the midsole has been in commercial use for about forty years, primarily to provide cushioning in modern footwear in the form of relatively soft foamed plastic or other elastomeric material that compresses relatively easily under the body weight load of a wearer of a footwear/orthotic sole **28**. Standard midsole material in the footwear art is the use of a foamed plastic like EVA or PU, as well as other foamed elastomeric materials indicated in paragraph number 0178 of the '087 Application incorporated by reference herein earlier or equivalent materials.

Since the primary function of midsole **148** in the footwear art is to provide cushioning, such foamed plastics in general use are relatively soft, ranging typically from a fairly soft 30 durometers on a Shore A Hardness Scale to a relatively harder 60 durometers and about 40-70 durometers on the Asker C Hardness Scale.

It is the applicant's view that these standard ranges of midsole hardness are excessively soft in order to compensate for the general commercial use of a non-optimal, not sufficiently anthropomorphic shape for the basic structure of footwear/orthotic soles **28**. That is, the softness of the midsole material allows conventional footwear/orthotics **22**, especially the sides, to bend up more easily into a shape more like that of a wearers foot sole subjected to a body weight load. The applicant's firm view that the more direct and effective approach is to obviate the need to compensate by using an anthropomorphically shaped footwear/orthotic sole **28** structure, as described previously by the applicant in this and the applicant's prior footwear applications and patents incorporated by reference herein. Moreover, recent human biomechanics research indicates a counter-intuitive result: that softer midsole cushioning actually causes higher impact forces for a wearer.

Consequently, based on the foregoing, the only direct way to achieve a lower, more natural level of impact forces on a wearer is to form a new combination of significantly firmer midsole material together with the correct, anthropomorphic footwear/orthotic sole **28** shape previously described by the applicant. However, increased firmness alone results in instability, since footwear/orthotic soles **28** that are rounded and that do not flatten easily like the rounded sole of an unloaded wearer's foot does under a body weight load will function instead roughly like a rigid rocking chair, not a foot sole, which is rounded but flattens easily under body weight.

Therefore, increased material firmness must be newly combined with increased structural flexibility provided by the applicant's internal sipe inventions **510/511/513** in order to create footwear/orthotic soles **28**, or removable midsole/orthotic inserts **145**, that are both rounded like the shape of a wearer's unloaded foot sole and deformable so as to flatten like that wearer's rounded foot sole flattens under a body weight load. As a direct result, at the same time impact forces on a wearer are reduced to a natural, bare foot level, while "energy return" is increased to a natural, bare foot level, instead of the relative energy loss (actually, "negative energy return") of conventional athletic shoe soles compared to the bare foot.

The use of midsole **148** material that is firmer than that which is standard in the footwear art therefore has significant functional benefits in combination with the applicant's internal sipe inventions. Such relatively firm or hard midsole **148** material for footwear/orthotic soles **28** and inserts **145** can usefully be on a Shore A Hardness Scale, for example, greater than 60 durometers, such as at least 65 durometers, at least 70 durometers, at least 75 durometers, at least 80 durometers, at least 85 durometers, at least 90 durometers, at least 95 durometers, or 100 durometers; or midsole **148** material that is on a Shore D Hardness Scale at least 20 durometers or at least 30 durometers or at least 40 durometers or at least 50 durometers or at least 60 durometers or at least 70 durometers or at least 80 durometers or at least 90 durometers; or midsole material that is on the Asker C Hardness Scale greater than 70 durometers or over 75 durometers or over 80 durometers or over 85 durometers or over 90 durometers or over 95 durometers or 100 durometers. Accordingly, for each of the embodiments disclosed in this application, the midsole material **148** may be designed with this increased firmness/hardness as discussed in this paragraph above (for example, a hardness of greater than 60 durometers).

The midsole **148** used in the applicant's footwear or orthotic inventions can have multiple layers, each with dif-

ferent durometers (of either scale), such varying from a firmest nearest to an outsole and a least firm nearest to a wearer's foot sole.

Also, since the applicant's view outlined above is that the function of midsole **148** material is to provide flexibility, not to provide cushioning, then the use of conventional foamed material is no longer required, given that the injection of gas to create cells within conventional midsole **148** material as identified earlier is done to produce an unnecessary cushioning property into the **148** material. Therefore, reduced foam or non-foamed plastic or other reduced foam or non-foamed elastomeric (or non-elastomeric materials) or combination thereof can be usefully employed with improved function in the footwear/orthotic soles **28** and removable midsole/orthotic inserts **145** of this application or the applicant's prior footwear applications and patents incorporated by reference herein above. Similarly, reduced cell (open or closed) or non-cell plastic or other reduced cell (open or closed) or non-cell elastomeric (or reduced or non-elastomeric) materials or combination thereof can be usefully employed with improved function in the footwear/orthotic soles **28** and removable midsole/orthotic inserts **145** of this application or the applicant's prior footwear applications and patents incorporated by reference herein above.

Note that the above reduced foam or non-foam and/or reduced cell or non-cell elastomeric (or reduced or non-elastomeric) midsole **148** material described in this paragraph can be otherwise the same as those remaining midsole **148** materials (but without foam and/or cells or reduced foam and/or reduced cells in terms of size or number) indicated previously in paragraph 0178 of the '087 application. Associated with this reduction would be a cessation or reduction in the gas injected in the midsole **148** manufacturing or injection process. Note the reduction in cells above can be in number (per unit volume, for example) or size or both, and reduced foam and/or cells can be measured in increased weight per unit such as volume of material, for example.

In summary, it is the use of the applicant's insertable internal sipe inventions, including the **510/511/513** inventions of this application, not midsole **148** foamed or cellular material, that can provide natural flexibility and impact force reduction like the foot sole of the wearer. In combination with the applicant's novel insertable internal sipe invention, this new to the footwear art midsole **148** material described above uniquely provides a new capability for footwear/orthotic soles **28** to function in the same manner and with the same performance characteristics as a wearer's foot sole—an important capability unavailable with conventional foamed or celled midsole **148** material. And this beneficial new combination can also be combined usefully with any of the applicant's prior footwear/orthotic sole **28** and removable midsole/orthotic insert **145** to produce other new invention with improved, more natural performance characteristics.

The bottom or outer sole **149** is often made, at least in one or more parts, with blown rubber for cushioning and flexibility, so that it is similar in structure and function to foamed, celled midsole **148** material described previously. For the same reasons described previously then, the use of non-blown rubber (or reduced cell/foam rubber) combined with the applicant's internal sipe inventions, such as the **510/511/513** inventions of this application, provide useful improvements to footwear/orthotics **28** and removable midsole/orthotic inserts **145**, and can also usefully be employed in conjunction with the reduced foam or non-foam and/or reduced cell or non-cell midsole **148** material described in the previous paragraph.

For both reduced foam or non-foam and/or reduced cell or non-cell midsole **148** or bottom sole **149** materials, the new materials share the new property of less or no substantial reduction in thickness under compression from a body weight load of a wearer, while rigidity is avoidable through the flexibility provided by the applicant's internal sipes inventions, including the **510/511/513** inventions of this application. Incompressible solids, that is, materials that can be deformed but do not change in volume are described by the Mooney-Rivlen equation, which can be useful in identifying material properties with optimal material characteristics desired by the applicant, which is minimal thickness reduction under compression, but with maximal flexibility.

The additional use of fiber, including inelastic but flexible fiber, is beneficial in assisting the new midsole **148** (or bottom sole **149**) to reduce compression deformation while maintain flexibility of the footwear/orthotic **28** or insert **145**, especially if the fiber **518** is located or oriented substantially in a plane at least roughly paralleling the inner surface of the sole **28** or insert **145** which should follow the outer surface of the wearer's foot sole.

The firm or hard material described above for midsole **148** and bottom sole **149** provides better responsiveness than softer materials, a desirable characteristic for athletic shoes particularly and generally better stability for any footwear/orthotic soles **28** or inserts **145**. Similarly, reduced foam or non-foam and/or reduced cell or non-cell sole **148** or **149** material allows for thinner footwear/orthotic soles **28** or inserts **145**, which reduces the torque inherent in the thickness of the sole **28** or insert **145**, thereby also increasing responsiveness and decreasing instability, such as related to ankle sprains or over-pronation.

Moreover, the applicant's **510/511/513** are uniquely designed to reduce shear forces, rather than compression force (which as noted above is probably unnecessary), since most artificial surfaces like concrete or asphalt significantly increase shear forces above a natural level, compared to a natural surface like grass or dirt (either loose or packed). In addition, the potentially excessive bulkiness of the applicant's curved stability sides shown in this and earlier applications and patents incorporated by reference herein above is reduced by the thinner sole **28** or insert **145**.

Potential midsole **148** and outsole **149** materials include elastomers, rubber, and plastic, as noted above, including polymers (used singularly or in combination); examples are polyolefins, fluoropolymers, and vinyls, as well as polypropylene, polystyrene, nylon, polycarbonate and acrylics, including in the form of fibers. Also, materials with a flexural modulus higher or much higher than is standard in the art is beneficial.

The new firm or hard, reduced foam or non-foam and/or reduced cell or non-cell **148** or **149** materials described above on this and the previous three pages can be used beneficially with footwear/orthotic soles **28** and uppers **21**, as well as removable midsole/orthotic inserts **145**, and also with any other of the previously or later described non-footwear/orthotic products, including, for example, helmets **550**, balls **530**, tires **535**, implants or external pads or other protection **540**, structural elements **550** including golf clubs **550**, artificial joints like spinal disks **560**, and many other products described or listed in this or previous applications and patents previously incorporated by reference herein.

The same logic described above that indicates the improvements provided by using firm-to-hard, reduced foam or non-foam and/or reduced cell or non-cell **148** or **149** material also applies to materials used in the applicant's internal sipe inventions, including the **510/511/513** inventions of this

application, including for example midsole material used in either the **504** or the **502** components (or both) of the siped compartment **510** and **511** inventions.

By the same logic, any gas or "air" used in the **510**/**511**/**513** or earlier inventions is less beneficial, although still a useful improvement to the prior art. Furthermore, by this logic, either compartment/chamber/bladder **500** or **501** can contain a firm-to-hard, reduced foam or non-foam and/or reduced cell or non-cell midsole **148** material, either in a single layer or multiple layers separated by internal sipes **505** (one or more) between layers, for example a single sipe **505** between two midsole **148** material layers, such as in the example embodiment shown in FIG. **45**, wherein the inner compartment **501** contains two midsole layers. Any practical number of midsole layers of any shape and associated sipes **505** of any shape is possible, with each additional associated sipe **505** providing additional flexibility to the compartment/chamber/bladder **500** or **501**.

FIG. **46** shows a different example embodiment wherein the inner compartment/chamber/bladder **501** shown contains a multitude of ball bearing-type structures made of a midsole **148** material that is firm-to-hard, reduced foam or non-foam and/or reduced cell or non-cell, as described above. The ball bearings **516** can be fixed or free-moving within the inner compartment **501**, so that for example if the ball bearings **516** are sufficiently firm-to-hard, the bearings **516** can create significant pressure points against a wearer's foot sole since the bearings **516** would not compress significantly under a wearer's body weight load, but if relatively free-moving within compartment **501** (or alternatively, with compartment/chamber/bladder **500**, such as free-moving within a sipe **505**, for example), the ball bearing **516** pressure points can move sufficiently within the compartment/chamber/bladder **501** to provide thereby a foot massage to a wearer of the footwear/orthotic sole **28** or removable midsole or orthotic insert **145** with a compartment/chamber/bladder **501** or sipe **505** with sufficiently firm-to-hard ball bearings **516**, which also assist in developing healthy protective calluses (rather than potentially blisters if the ball bearings **516** were fixed in the same positions so that the point pressure did not move, such as randomly, which protects the foot sole)

FIG. **47** shows an embodiment example wherein flexible fiber is used to reinforce one or more compartment/chamber/bladders **500** or **501**, as shown, wherein elastic or inelastic fibers **518** can be used to help stabilize the size and shape of the one or more compartments/chambers/bladders **500** or **501**, such as for example under a body weight load of a wearer, to reduce compression of the sole. Note the fiber **518** shown parallel the shape of the inner surface **30** of the footwear/orthotic sole **28**, which parallels the shape of a wearer's foot sole.

FIG. **48**A shows another example embodiment with fiber **518** wherein the fiber **518** is sandwiched between two separate layers of midsole **148** (or bottom sole **149**) material, including firm-to-hard, reduced foam or non-foam and/or reduced cell or non-cell; alternatively, the fiber **518** can be embedded within the midsole **148**, as shown in FIG. **48**B, or bottom sole **149** material; multiple layers of fiber and/or midsole **148** can be a useful improvement, again as shown in FIG. **48**B.

FIGS. **48**C-**48**E show alternate embodiment examples of shoe sole material incorporating vertical sipes based on FIGS. 73A-73C of the '665 Application that would be incorporated in shoe soles in the manner shown in FIGS. **25**B and **26**B for FIG. **48**C and FIGS. **25**A and **26**A for FIGS. **48**D and **48**E.

FIGS. **49**-**50** and **51**A-**51**B show examples of embodiments of the useful improvement of applicant's siped compartment/chamber/bladder **510** invention combined with the gas bladders **501** well known in the art as made by Nike™ and marketed as Nike Air™ (and shown previously as FIGS. **38**-**40**). FIG. **52** is a similar example embodiment incorporating a New Balance N-ergy™ cartridge as a compartment/chamber/bladder **501** in the applicant's siped compartment **510** invention.

FIG. **51**B shows a side view of the same insertable device **510** shown in FIG. **51**A, the device using an example conventional commercial gas bladder as inner bladder or compartment or chamber **500**; the device **510** is shown located in a shoe sole **28** or **22**.

Any one or more parts of FIGS. **45**-**47**, **48**A-**48**E, **51**A-**51**B and **52**A-C can be combined with any one or more parts of one or more of the previous Figures of this or the applicant's prior footwear applications or patents incorporated by reference herein. Also, any inventive combination that is not explicitly described above in the example shown in FIGS. **45**-**47**, **48**A-**48**E, **51**A-**51**B and **52**A-C is implicit in the overall invention of this application and, consequently, any part of the example embodiments shown in preceding FIG. **45**-**47**, **48**A-**48**E, **51**A-**51**B and **52**A-C and/or associated textual specification can be combined with any other part of any one or more other elements of each other or the inventive and prior art examples described in FIGS. **1**-**44** and **53**-**79** and/or associated textual specification and/or, in addition, can be combined usefully with any one or more other elements of each other or the inventive or prior art examples shown in prior published FIGS. 1-75 of the '869 Patent and the '087, '034 and '665 Applications, as well as additional FIGS. 76-80, 81A-81D and 82A-82C of the '665 Application, and also added FIGS. 1-43 of the '887 Application.

FIG. **53** is a example of a wheel/tire combination, the Michelin™ "Tweel" with the wheel **533** including the **510**/**511**/**513** invention and FIG. **54** is a prior art example of a conventional tire.

FIG. **52**B shows a detailed frontal plane cross section of an example conventional commercial gas bladder/compartment/chamber shown as inner bladder or compartment or chamber **501** in schematic perspective in FIG. **52**A. FIG. **52**C shows the same detailed cross sectional view of the same inner bladder or compartment or chamber **501** enveloped by an outer bladder or compartment or chamber **500** forming an insertable siped compartment **510**, including wherein all or part of the sipe **505** is a slit.

FIG. **55** is cross-section enlarged view of slightly more than half of a footwear/orthotic sole **28** comprising at least in part or entirely a mixture or mixtures of any kind of plastic **521** polymers and elastomers and rubber **522** or compounds and combinations thereof, including mixtures including particles or components (including microscopic or at the molecular level) of any number (per unit volume, for example), size, or shape, including compounds with minimal or no substantial or no compression under a body weight load, and can include liquid or gel injection molding. The benefit of the mixture material is create a single material with more flexibility than a typical bottom sole **149** material, while at the same time providing better durability than a typical midsole material **148**, including new forms of those materials described by the applicant previously. Optionally, the applicant's **510** and **511** inventions can also in the same manner include the same mixture or another mixture as described in this paragraph, as can removable midsole/orthotic inserts **145**.

FIG. **56** is a similar cross-section to FIG. **55** showing a portion of a footwear/orthotic sole **28** comprising at least in part or entirely a midsole **148** material including cells **517** that

include a liquid or gel, either partially or substantially or completely. The liquid or gel cells **517** can be of any number (per unit of volume, for example), or size, or shape, and the midsole **148** material surrounding the cells can be non-compressible or not substantially compressible or minimally compressible. The benefit of this material structure is that the liquid or gel cell would be at least minimal compression under a body weight load, in marked contrast to the substantial compression and associated degraded performance of conventional midsole **148** materials with convention gas cells. Liquid or gel injection molding can be utilized therefore in place of gas injection molding.

Any one or more parts of FIGS. **55-56** can be combined with any one or more parts of one or more of the previous Figures of this or the applicant's prior footwear applications or patents incorporated by reference herein. Also, any inventive combination that is not explicitly described above in the example shown in FIGS. **55-56** is implicit in the overall invention of this application and, consequently, any part of the example embodiments shown in preceding FIGS. **44-56** and/or associated textual specification can be combined with any other part of any one or more other elements of each other or the invention and prior art examples described in FIGS. **1-54** and **57-79** and/or associated textual specification and/or, in addition, can be combined usefully with each other or any one or more other elements of the inventive or prior examples shown in prior published FIGS. 1-75 of the '869 Patent and the '087, '034 and '665 Applications, as well as additional FIGS. 76-80, 81A-81D and 82A-82C of the '665 Application, and also added FIGS. 1-43 of the '887 Application.

FIGS. **57** and **58** are additional examples of embodiments of the applicant's **510/511/513** inventions applied to tire **535** design, as were earlier FIGS. **28**A and **28**B. FIG. **57** shows a cross-section of a tire **535** embodiment with an outer tire **500** and an inner tire **501**, with an internal sipe **505** between the two tires **500** and **501**; and the sipe **505** shown includes media **506** and/or fiber **518**, such as Kevlar™ and/or carbon fiber or any other fiber (or steel or other metal cable), on for example the outer surface of the inner tire **501** (or embedded therein or thereon).

FIG. **58** shows an example embodiment of a tire **535** with an internal sipe **505** above the tread **526** area and, for one example, above steel belts **537**; the internal sipe **505** includes a Magnetorheoloical Fluid **508** and in proximity to the sipe **505**, such as directly above as shown, can be Piezoelectric components **519** that can provide activating current under stress such as tire deformation to the magnetic fluid **508** to make it resistant to further deformation; i.e., the greater the stress deformation, the greater the resistance to further deformation, making the tire **535** a self-powered active suspension component.

Any one or more parts of FIGS. **53** and **57-58** can be combined with any one or more parts of one or more of the previous Figures of this or the applicant's prior footwear applications or patents incorporated by reference herein. Also, any inventive combination that is not explicitly described above in the example shown in FIGS. **53** and **57-58** is implicit in the overall invention of this application and, consequently, any part of the example embodiments shown in preceding FIGS. **53** and **57-58** and/or associated textual specification can be combined with any other part of any one or more other elements of each other or the invention and prior art examples described in FIGS. **1-52**, **54-56**, and **59-79** and/or associated textual specification and/or, in addition, can be combined usefully any one or more other elements of each other or the inventive examples shown in prior published FIGS. 1-75 of the '869 Patent and the '087, '034 and '665 Applications, as well as additional FIGS. 76-80, 81A-81D and 82A-82C of the '665 Application, and also added FIGS. 1-43 of the '887 Application.

FIG. **59** shows a perspective view of a glove **571** (or mitten or mitt, such as a baseball mitt, with an example embodiment of the applicant's **510** or **511** or **513** invention in two areas; any of the inventions can be used in any area of the glove or any number or in combination with each other and can be asymmetrical between right and left, or any other of the previously described variations can be used beneficially.

FIG. **60**A shows a perspective view of example embodiments of protective apparel or clothing **570** such as pant or shorts with the applicant's **510** or **511** or **513** invention used in two areas. Similarly, FIGS. **60**B and **60**C show exemplary embodiments including dressings, as well as bandages and tape with the applicant's **510** or **511** or **513** invention. It is understood that other protective apparel, clothing, and dressing embodiments with any of the previously described variations can be used beneficially.

Any one or more parts of FIGS. **59** and **60**A-**60**C can be combined with any one or more parts of one or more of the previous Figures of this or the applicant's prior footwear applications or patents incorporated by reference herein. Also, any inventive combination that is not explicitly described above in the example shown in FIGS. **59** and **60**A-**60**C is implicit in the overall invention of this application and, consequently, any part of the example embodiments shown in preceding FIGS. **59** and **60**A-**60**C and/or associated textual specification can be combined with any other part of any one or more other elements of each other or the invention and prior art examples described in FIGS. **1-58** and **61-79** and/or associated textual specification and/or, in addition, can be combined usefully with any one or more other elements of each other or the inventive or prior art examples shown in prior published FIGS. 1-75 of the '869 Patent and the '087, '034 and '665 Applications, as well as additional FIGS. 76-80, 81A-81D and 82A-82C of the '665 Application, and also added FIGS. 1-43 of the '887 Application.

FIG. **61**A shows a perspective view of a laptop personal computer **580** or any other electronic device with one of a potential multitude of potential example embodiments of the applicant's **510** or **511** or **513** inventions described above are used in two areas, but other useful embodiments with any of the previously described variations can be employed beneficially. For example, as shown, the **510/511/513** inventions can be used for cushioning selected corners of the laptop or can be integrated in the laptop frame in the same or other areas; and/or individual components of the laptop computer such as a harddrive can be protected by being mounted in a protected **510/511/513**, such as the housing of the harddrive forming an inner compartment **501** of the **510** siped compartment invention. FIG. **61**B shows a semiconductor microchip device **581** example including a part of a die or an entire die or multiple dies assembled together using the applicant's **510/511/513** invention; other devices **581** can include other micro- and nanotechnology devices, including microelectromechanical systems (MEMS), field-programmable gate arrays (FPGA's) and faraday cages, photovoltaic cells, fuel cells, batteries, and including devices assembled at the molecular or anatomic scale.

Any one or more parts of FIGS. **61**A-**61**B can be combined with any one or more parts of one or more of the previous Figures of this or the applicant's prior footwear applications or patents incorporated by reference herein. Also, any inventive combination that is not explicitly described above in the example shown in FIGS. **61**A-**61**B is implicit in the overall invention of this application and, consequently, any part of the

example embodiments shown in preceding FIGS. **61**A-**61**B and/or associated textual specification can be combined with any other part of any one or more other elements of each other or the invention and prior art examples described in FIGS. **1-60** and **62-79** and/or associated textual specification and/or, in addition, can be combined usefully with any one or more other elements of each other or the inventive or prior art examples shown in prior published FIGS. 1-75 of the '869 Patent and the '087, '034 and '665 Applications, as well as additional FIGS. 76-80, 81A-81D and 82A-82C of the '665 Application, and also added FIGS. 1-43 of the '887 Application.

FIG. **62** shows a perspective view of a piece of cushioned furniture **590**, such as the chair shown, with an example embodiment of the applicant's **510** or **511** or **513** invention shown in the seat cushion and the back cushion, but many other embodiments with any of the previously described variations can be usefully employed.

FIG. **63** shows a perspective view of a bed with a mattress **591** having an example embodiment of the applicant's **510** or **511** or **513** invention, which can also be used as a separate mattress topper, and either can be in the form of many other embodiments with any of the previously described variations.

FIGS. **64** and **65** show perspective view of a pillow **591** and a wedge cushion **591**, respectively, each with an example embodiment of the applicant's **510** or **511** or **513** invention, and many other embodiments with any of the previously described variations can be usefully employed with either.

Any one or more parts of FIGS. **62-65** can be combined with any one or more parts of one or more of the previous Figures of this or the applicant's prior footwear applications or patents incorporated by reference herein. Also, any inventive combination that is not explicitly described above in the example shown in FIGS. **62-65** is implicit in the overall invention of this application and, consequently, any part of the example embodiments shown in preceding FIGS. **62-65** and/or associated textual specification can be combined with any other part of any one or more other elements of each other or the invention and prior art examples described in FIGS. **1-61** and **66-79** and/or associated textual specification and/or, in addition, can be combined usefully with any one or more other elements of each other or the inventive or prior art examples shown in prior published FIGS. 1-75 of the '869 Patent and the '087, '034 and '665 Applications, as well as additional FIGS. 76-80, 81A-81D and 82A-82C of the '665 Application, and also added FIGS. 1-43 of the '887 Application.

FIG. **66** shows a cross-section through radius view of the roughly circular example embodiment of a cable **610** of wire or optical fiber or waveguide (including optical omniguide), for example, with inner and outer layers (such as **501** and **500** or **512**) and an internal sipe **505** between layers, as one example of the applicant's **510** or **511** or **513** inventions; alternatively, FIG. **66** can show a hose schematically, with the center hollow and proportionately larger. Many other useful embodiments of either with any of the previously described variations are potentially beneficial.

Any one or more parts of FIG. **66** can be combined with any one or more parts of one or more of the previous Figures of this or the applicant's prior footwear applications or patents incorporated by reference herein. Also, any inventive combination that is not explicitly described above in the example shown in FIG. **66** is implicit in the overall invention of this application and, consequently, any part of the example embodiments shown in preceding FIG. **66** and/or associated textual specification can be combined with any other part of any one or more other elements of the invention and prior art examples described in FIGS. **1-65** and **67-79** and/or associated textual specification and/or, in addition, can be combined usefully with any one or more other elements of the inventive or prior art examples shown in prior published FIGS. 1-75 of the '869 Patent and the '087, '034 and '665 Applications, as well as additional FIGS. 76-80, 81A-81D and 82A-82C of the '665 Application, and also added FIGS. 1-43 of the '887 Application.

FIG. **67** shows a chart displaying "Approximate Comparison of Hardness Scales". Products using the **510** or **511** or **513** inventions can be made of any material and any material hardness shown in chart, including Rockwell C and B Scales and Brinell Hardness Scale, including metallic and ceramic, generally for non-cushioning, relatively rigid structural elements into which a degree of flexibility is to be introduced using the applicant's **510/511/513** inventions, specific examples of which are shown in FIGS. **24**C-**24**D, **30**A-**30**C, **31**B, **32**B, **61**, **68**, **69**, **71**, and **73**A.

FIG. **68** shows an example of a building **620** such as a house including a foundation, the building including a multitude of architectural components including any structural component with any of the applicant's **510/511/513** inventions, including foundation, wall, flooring, door, ceiling, window, and roof components.

FIG. **69** shows an example of a human torso brace **630** with any of the applicant's **510/511/513** inventions with cushioning components and/or more rigid protective components.

FIG. **70** shows an example of a knee brace **630** with inner pads **631** with any of the applicant's **510/511/513** inventions.

Any one or more parts of FIGS. **69-70** can be combined with any one or more parts of one or more of the previous Figures of this or the applicant's prior footwear applications or patents incorporated by reference herein. Also, any inventive combination that is not explicitly described above in the example shown in FIGS. **69-70** is implicit in the overall invention of this application and, consequently, any part of the example embodiments shown in preceding FIGS. **69-70** and/or associated textual specification can be combined with any other part of any one or more other elements of each other or the invention and prior art examples described in FIGS. **1-68** and **71-79** and/or associated textual specification and/or, in addition, can be combined usefully with any one or more other elements of each other or the inventive or prior art examples shown in prior published FIGS. 1-75 of the '869 Patent and the '087, '034 and '665 Applications, as well as additional FIGS. 76-80, 81A-81D and 82A-82C of the '665 Application, and also added FIGS. 1-43 of the '887 Application.

FIG. **71** shows that any of the structural components of an example of a transportation vehicle **645** such as a automobile, bus, truck, motorcycle, boat, barge, airplane, helicopter, blimp, or any other transportation or work vehicle can beneficially incorporate any of the applicant's **510/511/513** inventions.

FIG. **72** shows that any of the cushioning components of an example of an interior **646** of a transportation vehicle such as a automobile, bus, truck, motorcycle, boat, barge, airplane, helicopter, blimp, or any other transportation or work vehicle can beneficially incorporate any of the applicant's **510/511/513** inventions.

FIG. **73**B shows a prior art tennis racquet and FIG. **73**A shows an example of a tennis or other sports racquet **550** or sports stick for hockey or lacrosse or golf club shaft that can beneficially incorporates any of the applicant's **510/511/513** inventions.

FIGS. **74-79** show other examples such as electronic game controllers or any other remote controllers **580**, manual tools

550, power tools 550, household tools 550 like electric irons, bicycles 640 and cell phones 580 that can beneficially incorporates any of the applicant's 510/511/513.

Any one or more parts of FIGS. 68 and 71-79 can be combined with any one or more parts of one or more of the previous Figures of this or the applicant's prior footwear applications or patents incorporated by reference herein. Also, any inventive combination that is not explicitly described above in the example shown in FIGS. 68 and 71-79 is implicit in the overall invention of this application and, consequently, any part of the example embodiments shown in preceding FIGS. 68 and 71-79 and/or associated textual specification can be combined with any other part of any one or more other elements of each other or the invention and prior art examples described in FIGS. 1-67 and 69-70 and/or associated textual specification and/or, in addition, can be combined usefully with any one or more other elements of each other or the inventive or prior art examples shown in prior published FIGS. 1-75 of the '869 Patent and the '087, '034 and '665 Applications, as well as additional FIGS. 76-80, 81A-81D and 82A-82C of the '665 Application, and also added FIGS. 1-43 of the '887 Application.

FIG. 80A shows that, in an analogous way, especially to the thicker heel portion of a typical shoe sole, a thick urban area telephone book has in effect hundreds of mostly "internal sipes", each page being in effect separated by a horizontal internal slit from each adjacent page, each of which thereby is able to move freely relative to each other, resulting in a flexible telephone book that bends quite easily as is well known by all, while at the same time relatively stable when a vertical force like body weight is applied. FIG. 80B shows, in contrast, if the same wood fiber material with the same dimensions as a thick telephone book were formed instead into a single piece of wood with no pages, like a solid particle board, it would be quite rigid with little flexibility, although it will support a body weight stably. FIG. 80C shows if, instead, the sipes were rotated 90 degrees into vertical slits and open to the bottom, so that the spine of a much wider telephone book with shorter pages is on top (in the form of a shoe sole with deep open external sipes, those external sipes would also provide a substantial amount of flexibility like that of the human foot sole, but at the cost of excessive instability when a vertical force like body weight is applied, as is obvious from common experience, since the pages will splay out uncontrollably.

FIGS. 81A-81D shows the a significant benefit of the applicant's insertable sipe component 510/511/513 compared to the applicant's earlier sipe invention, which is shown in FIG. 81A (which is FIG. 12B of the '665 application), wherein sipes are indicated by numerals 181 and 182, which allows an inner midsole section 188 to move freely inside outer midsole sections 184 and a bottom sole 149. The sipes are created by not gluing the three sections together during assembly of the shoe sole except where the outer midsole sections 184 join the bottom sole 149 at numeral 8. FIG. 81B highlights the very small area of the glue joint, which requires a delicate and new manufacturing glue step of great accuracy during assembly and a resulting relatively weak joint between bottom sole and midsole, for example.

FIG. 81C shows an example of the applicant's 510 invention that illustrates the much larger glue joint between midsole and bottomsole surfaces allowed through the use of the outer chamber 500 component, all of which can be glued to the surrounding midsole and bottomsole in a conventional assembly fashion, so that manufacturing of a shoe sole with the 510 invention is much simpler and unchanged from normal current practice for assembling conventional shoe soles with gas bladders like Nike Air™ and the resulting bond between bottomsole and midsole is much more secure, similar to that of a conventional shoe sole. FIG. 81D shows the very much larger surface area 8 used for gluing the bottom sole 149 to the outer midsole 184 (compared to the small glue area 8 shown in FIG. 81B and resulting much weaker joint between sole components in the earlier FIG. 81A sipe invention than in conventional shoe soles).

FIGS. 82A-82C, 83A-83C, 84A-84F, 85A-85D, 86A-86E and 87 illustrate further embodiments of the use of internally siped compartments or chambers (510) and/or flexible inserts and internal sipe components (511 and 513) with different shoe sole or orthotic configurations. FIGS. 82A-82C, 83A-83C, 84A-84F, 85A-85D, 86A-86E and 87 are example embodiments of the 510 or 511 or 513 inventions in the embodiments shown in FIG. 11A-11C, 21-23, 39A-39E & 40, 49A-49D, 51A-51E, and 62 of U.S. application Ser. No. 11/282,665, filed Nov. 21, 2005 and published on Nov. 9, 2006, on Pub. No. US 2006/0248749 A1, which is incorporated by reference in this application.

Any example of a new invention shown in the preceding FIGS. 1-81 and/or associated textual specification can be combined with any other part of any one or more other of the prior art or the applicant's prior invention examples shown in FIGS. 1-3, 5-7, 9, 11-42, 44-52, 55-62, 64-82 from prior published FIGS. 1-75 of the '087, '034 and '665 Applications and '869 Patent, and FIGS. 76-80, 81A-81D and 82A-82C of the '665 Application, as well as FIGS. 1-43 of the '887 Application (all of which have been herein incorporated by reference), and/or combined with any one or more other of subsequent new inventions shown in the examples described in FIGS. 1-79 and/or associated textual specification of this application to make new and useful improvements over the existing art.

The many preceding examples of embodiments of the applicant's inventions, devices or flexible inserts or components 510, 511, and 513, have many useful applications. Generally, the resilient inserts 510, 511, and 513 can be used for cushioning an object or a user, including cushioning equipment and apparel for athletic or non-athletic, occupational, recreational, medical, and other uses, including a footwear sole or upper or orthotic or orthotic upper, as well as over-the-counter footwear inserts, such as pads, insoles or arch supports.

The flexible inserts or components 510, 511, and 513 can be used in any protective clothing, like flexible insert 510 in the interior of the helmet shown in FIG. 24 that can be employed for any typical helmet applications, examples including sports like American football, biking, climbing or hockey and others; occupational, like construction or military or others; and transportation, like motorcycle, bicycle, automobile, or other; the flexible insert 510 (or 511 or 513 as useful alternatives) is shown as padding inside a relatively hard or semi-hard outer shell protective material including materials like plastic, carbon-fiber, ceramic, or other composites or metal or combinations thereof. The flexible inserts 510, 511, and 513 can be used in a similar shell construction for athletic or military protective equipment like face masks (which can be attached or integrated into the helmet), neck, shoulder, chest, hip, knee or elbow, shin and forearm guards, thigh or biceps guards, groin, hand, foot, and other guards, pads, or protectors.

Alternatively, flexible inserts or components 510, 511, and 513 can be used as padding alone or with a soft or relatively soft outer surface (without a hard shell) for medical uses (prescriptive or over the counter) like generally in the field of orthopaedics (like braces, such as back or leg or ankle braces

and replacement spinal or other disks for spinal or other joint surgery or non-joint surgery), plastic surgery (including breast and other fatty deposit replacement/enhancement implants), prosthetics and podiatrics, and elderly or recuperative care to protect the above noted anatomical structures and for dental applications, like mouth guards (athletic teeth protectors and night guards and braces); in addition, similar padding can be used on artificial limbs and other prosthetic devices or braces and handles or grips, such as for crutches, walkers, canes; or in sports rackets or tools, like hammers, including powered, and handlebars, and guns and rifles and other devices with recoil shock; or for safety padding for crash protection, such padding for automobile dashboards or seat backs (including in airplanes, buses, and crash safety inflatable air bags.

Broadly, the flexible inserts or components **510**, **511**, and **513** can be usefully employed anywhere that cushioning already is being used, including bed and other furniture cushioning (including for special seating needs, like bicycle or other seats), packaging for shipping, luggage, playground and other flooring, protective padding or cases for equipment of any sort, including portable devices like PC laptops or video players and/or games, cell phones, personal digital assistants (PDA's), and personal digital music players like Apple Ipods™ and MP3 players, as examples, such as the mounting of delicate electronic (or other) components like hard-drives or for vibration dampening, such as in automobile structural and body components and connections.

In addition, if not otherwise shown in this application, one or more features or components of the example embodiments of the applicant's new footwear inventions shown in the preceding new FIGS. **1-23** and **25-26** and associated textual specification can be usefully employed in novel combination, for example, with one or more features or components of the applicant's previous inventive shoe soles and orthotics as described in FIGS. 1-82 of U.S. application Ser. No. 11/282,665 published as Publication No. US 2006/0248749 A1 on Nov. 9, 2006, as well as PCT Application Number PCT/US2005/042341WIPO which was published on 1 Jun. 2006 as International Publication No. WO 2006/058013, which are each independently hereby explicitly incorporated by reference herein in its entirety for completeness of disclosure, including but not limited to those combinations that: incorporate uppers that envelope the midsole and/or outsole and/or other features shown in published application '665 prior FIGS. 5-7 and 13; incorporate anthropomorphic shapes and/or chambers and/or other features shown in prior FIGS. 9 and 10; incorporate integral or insertable orthotics or microprocessor-controlled variable pressure and/or other features shown in prior FIG. 11; incorporate sipes and/or other features shown in prior FIG. 12; use uniform thickness (measured in frontal plane cross-sections) in rounded sole side or sole bottom portions, especially at essential support and stability elements and/or other features shown in prior FIGS. 14-16, 29-46 and 76-77; use increased or decreased (or variable) thickness in rounded sole side portions and/or other features shown in prior FIGS. 17-20, 24, and 27-28; use increased or decreased density or firmness in rounded sole side or bottom portions and/or other features shown in prior FIGS. 21-23 and 25-26; use rounding of the outer surface of the midsole on a sole side and/or other features shown in prior FIG. 43A; employ bent-in rounded sides and/or other features shown in prior FIG. 47; uses bulges with or without uniform thickness, at important support or propulsion areas and/or features shown in prior FIGS. 48 and 75; incorporates a flat heel (meaning no heel lift) and/or other features shown in prior FIGS. 51A-51E; incorporates negative heel embodiments and/or other features shown in prior FIGS. 49A-49D and 50A-50E; use rounded sides with variable thickness and firmness and/or other features shown in prior FIG. 52; employs sipes and/or other features shown in prior FIGS. 53-57, 70-71 and 73A-73B; incorporates fiber and/or multiple layers of chambers and/or other features shown in prior FIGS. 58-60; employ shoe soles or orthotics with sufficient width throughout or at specific portions to support a wearer's bone structures throughout a full range of motion and/or other features shown in prior FIGS. 61-65 and 72; uses relatively planar sides with rounded underfoot sole portions and/or other features shown in prior FIGS. 66 and 67; uses similarly shaped rounding on sole sides of different thickness at different parts of the sole and/or other features shown in prior FIG. 69; uses a variation of heel or forefoot lifts and/or other features shown in FIG. **74**; and/or other features shown in prior FIGS. 78-80, 81A-81D and 82A-82C.

The prior published FIGS. 1-75 in the preceding paragraph are the same FIGS. 1-75 of the applicant's two earlier applications, U.S. application Ser. No. 11/190,087 published as Publication No. US 2005/0268487 A1 on Dec. 8, 2005 describing footwear and U.S. application Ser. No. 11/108,034 published as Publication No. US 2005/0217142 A1 on Oct. 6, 2005 describing orthotics, as well as U.S. Pat. No. 7,010,869, issued Mar. 14, 2006 (of which the '034 Application is a continuation). Both of those '087 and '034 Applications and their U.S. publications and the '869 Patent are hereby expressly incorporated by reference in its entirety for completeness of disclosure of the applicant's combination of one or more features or components of those prior published FIGS. 1-75 with one or more features or components of FIGS. **1-23** and **25-26** of the present application, as described in the preceding paragraph.

In addition, one or more features or components of FIGS. **1-23** and **25-26** of the present application can be usefully combined with one or more features or components of FIGS. 1-43 of the applicant's earlier application Ser. No. 11/179,887 published as Publication No. US 2005/0241183 A1 on Nov. 3, 2005 describing footwear. The '887 is hereby expressly incorporated by reference in its entirety for completeness of disclosure of such novel combinations of any part or parts of this application, including any one or more features or components of new FIGS. **1-23** and **25-26** described in this application, and any one or more features or components of prior FIGS. 1-43 from any part or parts of the '887 application (and/or additionally combined with any part or parts of the preceding '087 and/or '034 applications or the '665 application). More explicitly, any one or more features or components of new FIGS. **1-23** and **25-26** described in this application can be usefully combined with any one or more features or components of '887 FIGS. 5-7 with uppers that envelope the midsole and/or outsole and/or other features shown; '887 FIGS. 9-10, 12E, 12F, 13E, and 14A with anthropomorphic shapes and/or chambers and/or other features shown; '887 FIGS. 11, 12A-12D and 13A-D with footwear soles incorporating fibers and/or other features shown; '887 FIGS. 16A-D through 27 with footwear sole internal sipes and/or other features shown; '887 FIGS. 28-30 with sufficient width in the form of rounded sides to support neutrally the full range of a wearer's ankle and foot motion and/or other features shown; '887 FIGS. 31 and 32A-32M with footwear sole support, including for women's high heel pumps, at one or more of the applicant's essential stability elements and/or other features shown; '887 FIGS. 35-40 with footwear sole sipes in the form of slits and channels and/or other features shown; '887 FIGS. 41-42 with footwear soles having uniform frontal plane thickness (measured in a frontal plane cross-section) and natural

flattening deformation under a wearer's body weight and/or others features shown; and '887 FIG. 43 with footwear soles having rounded sides with higher density midsole sides and/or other features shown.

Any combination that is not explicitly described above is implicit in the overall invention of this application and, consequently, any part of the inventions shown in the examples shown in preceding FIGS. **1-79** and/or textual specification can be combined with any other part of any one or more other inventions shown in FIGS. **1-79** and/or associated textual specifications and also can be combined with any one or more other inventive examples of published '665 application prior FIGS. 1-82 and/or textual specification of this application to make new and useful improvements over the existing art.

Published '665 Application prior FIGS. 1-82 and associated textual specification are also the same—verbatim—as the applicant's PCT application No. PCT/US01/13096, published by WIPO as WO 01/80678 A2 on 1 Nov. 2001; for completeness of disclosure, WO 01/80678 A2 in its entirety is also herein incorporated by reference into this application, as is PCT/US01/23865, published by WIPO as WO 02/09547 A2 on Feb. 7, 2002, both of which are available to the public in English on the WIPO Web Site in their entirety. Also incorporated by reference herein is published PCT Application No. PCT/US2005/042341, which is the same in its entirety as the '665 Application.

The '547 WIPO publication, titled "Shoe Sole Orthotic Structures and Computer Controlled Compartments", is also incorporated herein by reference to provide additional information on the applicant's prior orthotic inventions, which can usefully be combined with the orthotic inventions described and claimed in this application. However, the applicant's insertable midsole orthotic **145** in the '547 Publication (and the above referenced '034 application on orthotics) is very similar to the applicant's removable midsole insert **145** as described in this application and can generally be understood to be the same in structure and materials, although with a principal difference. Typically, an orthotic **145** is designed specifically for an individual wearer, unlike almost all footwear, which is mass-produced using lasts based on average foot shapes for specific populations; the only exception is custom footwear, which is relatively rare and simply cobbled more directly to the individual shape of the wearer's feet. The principal difference is that typically orthotics **145** are designed to be prescribed, for example, by a qualified expert like a health care professional such as a doctor or podiatrist in order to treat a wearer's diagnosed footwear-related problem; generally, orthotics **145** are for prescriptive, therapeutic, corrective, or prosthetic uses.

The applicant's other footwear U.S. Pat. Nos. 4,989,349; 5,317,819; 5,544,429; 5,909,948; 6,115,941; 6,115,945; 6,163,982; 6,308,439; 6,314,662; 6,295,744; 6,360,453; 6,487,795; 6,584,706; 6,591,519; 6,609,312; 6,629,376; 6,662,470; 6,675,498; 6,675,499; 6,708,424; 6,729,046; 6,748,674; 6,763,616; 6,789,331; 6,810,606; 6,877,254; 6,918,197; 7,010,869; 7,082,697; 7,093,379; 7,127,834; 7,168,185; and 7,174,658 are hereby incorporated by reference herein in their entirety into this application for completeness of disclosure of the applicant's novel and useful combination of one or more of any of the features or components of any of the figures of this application with one or more of any of the features of any one or more of the preceding applicant's patents listed above in this paragraph.

The applicant's other footwear U.S. Applications with Publication Numbers US 20020000051; 20020007571; 20020007572; 20020014020; 20020014021; 20020023373; 20020073578; 20020116841; 20030046830; 20030070320; 20030079375; 20030131497; 20030208926; 20030217482; 20040134096; 20040250447; 20050016020; 20050086837; 20050217143; and 20060032086 are hereby incorporated by reference herein in their entirety into this application for completeness of disclosure of the applicant's novel and useful combination of one or more of any of the features or components of any of the figures of this application with one or more of any of the features of any one or more of the preceding applicant's published U.S. Applications listed above in this paragraph.

The applicant's non-footwear patents on global network computers, U.S. Pat. Nos. 6,167,428; 6,732,141; 6,725,250; 7,024,449; 7,035,906, and 7,047,275 are hereby incorporated by reference herein in their entirety into this application for completeness of disclosure of the applicant's novel and useful combination of one or more of any of the features or components of any of the figures of this application with one or more of any of the features of any one or more of the preceding applicant's patents listed above in this paragraph.

The applicant's non-footwear applications on global network computers, U.S. application Ser. Nos. 09/085,755; 09/884,041; 09/935,779; 10/663,911; 11/196,527; 11/329,423; and 11/338,887, as well as U.S. application Ser. Nos. 10/802,049 and 10/684,657 with U.S. Publication Numbers US 2004/0215931 published Oct. 28, 2004 and US 2005/0180095 published Aug. 18, 2005, respectively, are hereby incorporated by reference herein in their entirety into this application for completeness of disclosure of the applicant's novel and useful combination of one or more of any of the features or components of any of the figures of this application with one or more of any of the features of any one or more of the preceding applicant's applications, including published applications, listed above in this paragraph.

To avoid confusion, any numeral in the above listed non-footwear patents or applications relating to computers that is the same as a numeral in the above listed footwear patents or applications should have (or be presumed to have) a prefix numeral of "1" added to the numeral (the equivalent of adding "1000" to the numeral, so that all the numerals of both sets of applications and patents remain unique).

In the following claims, the term "chamber" means a compartment **161** or a chamber **188** or a bladder and the term "sipe" means a sipe **505** or a slit or a channel or a groove as described in the textual specification above and associated figures of this application.

The foregoing shoe designs meet the objectives of this invention as stated above. However, it will clearly be understood by those skilled in the art that the foregoing description has been made in terms of the preferred embodiments and various changes and modifications may be made without departing from the scope of the present invention which is to be defined by the appended claims.

What is claimed is:

1. A helmet and/or helmet liner, having one or more internal flexibility sipes, said helmet and/or helmet liner comprising:

at least a first bladder, chamber, or compartment having an inner surface;

at least a second bladder, chamber, or compartment of a non-foamed plastic material and/or a non-blown rubber material located within and surrounded by said first bladder, chamber, or compartment, as viewed in a cross-section, and said a second bladder, chamber, or compartment having at least one cavity or void that least partially encloses at least one gas, as viewed in a cross-section, and an outer surface; and

at least one said internal sipe of said helmet and/or helmet liner;

wherein said at least one internal sipe is defined by at least a portion of said inner surface of said first bladder, chamber, or compartment and at least a portion of said outer surface of said second bladder, chamber, or compartment; and

said surface portions defining said at least one internal sipe oppose each other and said first and second bladders, chambers, or compartments are configured such that said surface portions defining said at least one sipe are movable relative to each other in a sliding motion; and

at least one attachment between said surface portions defining said at least one internal sipe, said at least one attachment being located at a central portion of said second bladder, chamber, or compartment.

2. The helmet and/or helmet liner according to claim **1**, wherein said at least one internal sipe separates most but not all of said inner surface of said first bladder, chamber or compartment and said outer surface of said second bladder, chamber or compartment.

3. The helmet and/or helmet liner according to claim **2**, wherein said at least one internal sipe includes a media.

4. The helmet and/or helmet liner according to claim **3**, wherein said media is a lubricant.

5. The helmet and/or helmet liner according to claim **1**, wherein at least a portion of said surface portions defining said at least one internal sipe are in contact with each other.

6. The helmet and/or helmet liner according to claim **1**, wherein said surface portions defining said at least one internal sipe are in contact with each other.

7. The helmet and/or helmet liner according to claim **1**, wherein said at least one internal sipe is a slit.

8. The helmet and/or helmet liner according to claim **1**, wherein said surface portions defining said internal sipe are substantially parallel.

9. The helmet and helmet liner as claimed in claim **1**.

10. The helmet and/or helmet liner as claimed in claim **1**, wherein the one or more attachments are configured to break away to compensate for a predetermined torsional load.

11. The helmet and/or helmet liner as claimed in claim **1**, wherein the one or more attachments are configured to return to their positions prior to the application of the predetermined torsional load upon relief of the predetermined torsional load.

12. The helmet and/or helmet liner as claimed in claim **1**, wherein the one or more attachments are configured to be reset or replaced when the predetermined torsional load is relieved.

13. The helmet as claimed in claim **1**.

14. The helmet liner as claimed in claim **1**.

15. The helmet and/or helmet liner as claimed in claim **1**, wherein said second bladder, chamber, or compartment comprises one or more structural elements.

16. The helmet and/or helmet liner as claimed in claim **15**, wherein said second bladder, chamber, or compartment and/or one or more structural elements comprises at least one foamed plastic material and/or blown rubber material.

17. The helmet and/or helmet liner as claimed in claim **15**, wherein said second bladder, chamber, or compartment and/or one or more structural elements is defined by at least one layer of foamed or non-foamed plastic material and/or blown or non-blown rubber material.

18. The helmet and/or helmet liner as claimed in claim **1**, wherein said second bladder, chamber, or compartment comprises one or more openings.

19. The helmet and/or helmet liner as claimed in claim **1**, wherein said surface portions defining said at least one internal sipe move relative to each other in a sliding motion in response to torsional and/or shear forces on said helmet and/or helmet liner to assist in controlling and absorbing an impact of said torsional and/or shear forces on an intended wearer.

20. The helmet and/or helmet liner as claimed in claim **1**, wherein said second compartment, chamber or bladder is completely surrounded by said second chamber, compartment or bladder, as viewed in a cross-section.

21. A helmet and/or helmet liner having one or more internal flexibility sipes, said helmet and/or helmet liner comprising:

at least a first bladder, chamber, or compartment having an inner surface;

at least a second bladder, chamber or compartment located within and surrounded by said first bladder, chamber, or compartment, as viewed in a cross-section, said second bladder, chamber or compartment having an outer surface; and said second bladder, chamber, or compartment being defined by one or more structural elements of a foamed plastic material and/or a blown rubber material, said one or more structural elements extending to proximate to an upper portion and an opposing lower portion of said inner surface of said first bladder, chamber or compartment, as viewed in a cross section when the helmet and/or helmet liner is in an upright position;

at least one said internal sipe of said helmet and/or helmet liner;

wherein said at least one internal sipe is defined by at least a portion of said inner surface of said first bladder, chamber, or compartment and at least a portion of said outer surface of said one or more structural elements; and

said surface portions defining said at least one internal sipe oppose each other and said first and second bladders, chambers, or compartments are configured such that said surface portions defining said at least one sipe are movable relative to each other in a sliding motion; and

at least one attachment between said surface portions defining said at least one sipe, said at least one attachment located at a central portion of said second bladder, chamber, or compartment.

22. The helmet and/or helmet liner as claimed in claim **21**, wherein said second bladder, chamber, or compartment is integrally formed by one or more structural elements of a foamed plastic material and/or a blown rubber material.

23. The helmet and/or helmet liner according to claim **21**, wherein said at least one internal sipe separates most but not all of said inner surface of said first bladder, chamber or compartment and said outer surface of said second bladder, chamber, or compartment.

24. The helmet and/or helmet liner according to claim **23**, wherein said at least one internal sipe includes a media.

25. The helmet and/or helmet liner according to claim **24**, wherein said media is a lubricant.

26. The helmet and/or helmet liner according to claim **21**, wherein at least a portion of said surface portions defining said at least one internal sipe are in contact with each other.

27. The helmet and/or helmet liner according to claim **21**, wherein said surface portions defining said at least one internal sipe are in contact with each other.

28. The helmet and/or helmet liner according to claim **21**, wherein said at least one internal sipe is a slit.

29. The helmet and/or helmet liner according to claim 21, wherein said surface portions defining said internal sipe are substantially parallel.

30. The helmet and helmet liner as claimed in claim 21.

31. The helmet and/or helmet liner as claimed in claim 21, wherein the one or more attachments are configured to break away to compensate for a predetermined torsional load.

32. The helmet and/or helmet liner as claimed in claim 21, wherein the one or more attachments are configured to return to their positions prior to the application of the predetermined torsional load upon relief of the predetermined torsional load.

33. The helmet and/or helmet liner as claimed in claim 21, wherein the one or more attachments are configured to be reset or replaced when the predetermined torsional load is relieved.

34. The helmet as claimed in claim 21.

35. The helmet liner as claimed in claim 21.

36. The helmet and/or helmet liner as claimed in claim 21, wherein said inner bladder, chamber, or compartment comprises one or more openings.

37. A helmet and/or helmet liner having one or more internal flexibility sipes, said helmet and/or helmet liner comprising:

at least a first bladder, chamber, or compartment having an inner surface;

at least a second bladder, chamber or compartment being defined at least by at least one layer of foamed or non-foamed plastic material and/or blown or non-blown rubber material located within and surrounded by said first bladder, chamber, or compartment, as viewed in a cross-section, and said at least one layer having an outer surface; and

at least one said internal sipe of said helmet and/or helmet liner;

wherein said at least one internal sipe is defined by at least a portion of said inner surface of said first bladder, chamber, or compartment and at least a portion of said outer surface of said at least one layer; and

said surface portions defining said at least one internal sipe oppose each other and said first and second bladders, chambers, or compartments are configured such that said surface portions defining said at least one sipe are movable relative to each other in a sliding motion; and

at least one attachment between said surface portions defining said at least one sipe, said at least one attachment located at a central portion of said second bladder, chamber, or compartment.

38. The helmet and/or helmet liner according to claim 37, wherein said at least one internal sipe separates most but not all of said inner surface of said first bladder, chamber or compartment and said outer surface of said at least one layer.

39. The helmet and/or helmet liner according to claim 38, wherein said at least one internal sipe includes a media.

40. The helmet and/or helmet liner according to claim 39, wherein said media is a lubricant.

41. The helmet and/or helmet liner according to claim 37, wherein at least a portion of said surface portions defining said at least one internal sipe are in contact with each other.

42. The helmet and/or helmet liner according to claim 37, wherein said surface portions defining said at least one internal sipe are in contact with each other.

43. The helmet and/or helmet liner according to claim 37, wherein said at least one internal sipe is a slit.

44. The helmet and/or helmet liner according to claim 37, wherein said surface portions defining said internal sipe are substantially parallel.

45. The helmet and helmet liner as claimed in claim 37.

46. The helmet and/or helmet liner as claimed in claim 37, wherein the one or more attachments are configured to break away to compensate for a predetermined torsional load.

47. The helmet and/or helmet liner as claimed in claim 37, wherein the one or more attachments are configured to return to their positions prior to the application of the predetermined torsional load upon relief of the predetermined torsional load.

48. The helmet and/or helmet liner as claimed in claim 37, wherein the one or more attachments are configured to be reset or replaced when the predetermined torsional load is relieved.

49. The helmet as claimed in claim 37.

50. The helmet liner as claimed in claim 37.

51. The helmet and/or helmet liner as claimed in claim 37, wherein said at least one layer comprises one or more structural elements.

* * * * *